TH9310/20 Series

AC/DC Withstanding Voltage/ Insulation Resistance Tester

Operation Manual

Tonghui Electronic Co.,Ltd.

www.tonghui.com.cn

Manual Printing History

The manual printing data and part number indicate its current edition. The printing date changes when a new edition is printed. The manual part number changes when extensive technical changes are incorporated.

TH9310/20 Series Operation Manual…….2013.8

Content

Chapter 1 Setup 5

1.1 Unpacking 5
1.2 Precautions for Use 5
1.3 Precautions for Moving 6
1.4 Checking Power Source and Fuse 6
1.4.1 Toggle power line voltage 6
1.4.2 Checking or replacing fuse 7
1.5 Connecting the AC Power Cord 7
1.6 Grounding 8
1.7 Checking Operations 8
1.8 Other Specifications 9

Chapter 2 Precautions on Handling 10

2.1 Prohibited Operations 10
2.2 Action When in Emergency 11
2.3 Precautions on Testing 11
2.4 Warning for Residual High Voltages 12
2.5 Dangerous States of Failed Tester 12
2.6 To Ensure Long-Term Use without Failures 13
2.7 Daily Checking 13

Chapter 3 Part names and Functions 14

3.1 Front Panel 14
3.1.1 POWER 14
3.1.2 START and STOP 14
3.1.3 Band and Model 14
3.1.4 USB Interface 14
3.1.5 Indicator 14
3.1.6 FUNCTION 15
3.1.7 HV 15
3.1.8 Output voltage HIGH terminal (HV) 15
3.1.9 Test low terminal, test current return terminal (LOW/RET) 15
3.1.10 Move key 15
3.1.11 Shortcut key 15
3.1.12 COPY key 15
3.1.13 LCD screen 15
3.2 Instruction of rear panel 15
3.2.1 Fan 16
3.2.2 Test low terminal, test current return terminal (optional) 16
3.2.3 High voltage output terminal (optional) 16
3.2.4 Power jack: with fuse holder, switchable line voltage mode 16
3.2.5 Protective earth terminal 16
3.2.6 Mark 16

3.2.7 RS232C serial interface 16
3.2.8 USB serial communication interface 16
3.2.9 HANDLER interface 17
3.2.10 SIGNAL interface 17
3.3 Description 17
Chapter 4 Basic operation 22
4.1 Interface structure overview 22
4.2 Instruction of panel function interface and parameter 22
4.2.1 SETUP 23
4.2.2 TEST (Take AC for example) 24
4.2.3 SYSTEM 25
4.2.4 FILE 27
4.3 Test item interface and parameter setup 28
4.3.1 AC withstanding voltage test parameter setup： 28
4.3.2 DC withstanding voltage test parameter setup : 29
4.3.4 Open and short detection (OS) parameter setup： 30
4.4 Test function theory and instruction 31
4.4.1 Start up test 32
4.4.2 Test delay 33
4.4.3 Test voltage rise 33
4.4.4 DC RAMP 33
4.4.5 High-voltage test 33
4.4.6 Voltage fall 33
4.4.7 Ground wire current detection function 33
4.4.8 Current over limit and arc detection (ARC) function 34
4.4.9 Fail judgment 35
4.4.10 Deal with test results 35
4.4.11 STOP 35
4.4.12 OFFSET 36
4.5 Structure and Use of HANDLER and SIGNAL Interface Circuit 36
4.5.1 Control interface theory 36
4.5.2 Control interface instruction 37
4.6 Other interface and function 37
4.7 Serial port commands instruction 38
4.7.1 SCPI commands 38
4.7.2 DISPlay Subsystem Commands 38
4.7.3 FUNCtion Subsystem Commands 39
4.7.4 FETCh Subsystem Commands 56
4.7.5 SYSTem Subsystem Commands 57
4.7.6 Other Commands 62
Chapter 5 Appendix 63
5.1Model and Specification of TH9320 series/TH9310 series 63

Chapter 1 Setup

This chapter describes the procedures from unpacking to installation to operation checking.

1.1 Unpacking

Upon receiving the product, confirm that the necessary accessories are included and have not been damaged in transit. Should any damage or shortage be found, please contact TongHui distributor/agent.

Items	Quantity
TH9310/20	1
TH90003R withstanding-voltage test leadwires	1
TH90003B withstanding-voltage ground leadwires	1
2.5A（220V-240V）/5A（100-120V）Time-lag Fuse	2 of each
AC Power cord	1
Operation Manual	1
Test Report	1
Servicing card	1
Accessories ordered by customers	1

1.2 Precautions for Use

Be sure to observe the following precautions when using the tester.

- **Do not use the tester in a flammable atmosphere.**

To prevent explosion or fire, do not use the tester near alcohol, thinner, or other combustible materials, or in an atmosphere containing such vapors.

- **Avoid locations where the tester is exposed to high temperatures or direct sunlight.**

Do not locate the tester near a heater or in areas subject to drastic temperature changes.
Operating temperature range: 5 °C to +35 °C
Storage temperature range: -20 °C to +60 °C

- **Avoid humid environments.**

Do not locate the tester in a high-humidity environment—near a boiler, humidifier or water supply.
Operating humidity range: 20% to 80% RH (no dew condensation permitted)
Storage humidity range: 90%RH or less (no dew condensation permitted)
Condensation may occur even within the operating humidity range. In that case, do not start using the tester until the location is completely dry.

- **Do not place the tester in a corrosive atmosphere.**

Do not install the tester in a corrosive atmosphere or one containing sulfuric acid mist or the like. This may cause corrosion of various conductors and imperfect contact with connectors, leading to malfunction and failure, or in the worst case, a fire.

- **Do not locate the tester in a dusty environment.**

Dirt and dust in the tester may cause electrical shock or fire.

- **Do not use the tester where ventilation is poor.**

This tester features a forced-air cooling system. Provide sufficient space for the air inlet on the lateral side and the air outlet on the rear side to allow air to flow.

- **Do not place the tester on a tilted surface or in a location subject to vibrations.**

If placed on a non-level surface or in a location subject to vibration, the tester may fall, resulting in damage and injury.

- **Do not use the tester in locations affected by strong magnetic or electric fields.**

Operation in a location subject to magnetic or electric fields may cause the tester to malfunction, resulting in electrical shock or fire.

- **Do not use the tester in locations near a sensitive measuring instrument or receiver.**

Operation in a location subject, may cause such equipment may be affected by noise generated by the tester.

At a test voltage exceeding 3 kV, corona discharge may be generated to produce substantial amounts of RF broadband emissions between grips on the test leadwire. To minimize this effect, secure a sufficient distance between alligator clips. In addition, keep the alligator clips and test leadwire away from the surfaces of conductors (particularly sharp metal ends).

1.3 Precautions for Moving

When moving the tester to the installation site or otherwise transporting it, take the following precautions:

- **Before moving the tester, turn off the power switch.**

Transporting the tester with its POWER switch on can lead to electric shock and damage.

- **When moving the tester, Disconnect all wires from it.**

Moving the tester without disconnecting the cables may result in breakage of the wire or injury due to the tester tipping over.

1.4 Checking Power Source and Fuse

1.4.1 Toggle power line voltage

⚠ **WARNING**: This instrument is designed to operate from the overvoltage category II. Do not operate it from the overvoltage category III or IV.

Before turning on the power, make sure of the identifying fuse and the source voltage agree with the input voltage on the rear panel.

Allowable voltage range:
110V：AC（99V to121V AC）
220V：AC（198V to 242V AC）
Allowable frequency range: 47 Hz to 63 Hz

⚠ **WARNING:** To prevent malfunctions, be sure to operate within the above voltage range.

1.4.2 Checking or replacing fuse

⚠ **WARNING** To prevent electric shock, before checking or replacing the fuse, be sure to turn off the POWER switch and unplug the AC power cord.
Make sure that the fuse used conforms to the instrument specifications, including shape, rating, and characteristics. Using a fuse with different rating or short-circuiting, the fuse holder will damage the instrument.

1. Turn off the POWER switch, and unplug the AC power cord.
2. On the rear panel, remove the fuse holder, by pushing it inward and unscrewing it counterclockwise using a screwdriver.
3.The fuse holder has the feature of switching the power input range and it shall reveal the POWER mark on the outer shell.
4. Check the fuse type and choose the fuse according to the following table. The fuse is time lag fuse.
5. Reinstall the fuse holder.

Voltage range	Frequency	Fuse(Time-lag)	Instrument series	Rated Power
110V	47-63Hz	5A	TH9320	400VA
			TH9310	300VA
220V		2.5A	TH9320	400VA
			TH9310	300VA

1.5 Connecting the AC Power Cord

The power cord that is provided varies depending on the destination for the product at the factory-shipment.
Do not use the AC power cord provided with the product as an AC power cord for other instruments.

Connection procedure:
1. Confirm that the supply voltage is within the line voltage range of the tester.
2. Confirm the nominal value of the fuse and the line power are correctly selcected.
3. Confirm that the POWER switch on the tester is off.
4. Connect the AC power cord to the AC LINE connector on the rear panel.
5. Use the provided power code or power code that is selected by qualified personnel.
6. Plug in the AC power cord.

1.6 Grounding

⚠ **WARNING:** Be sure to connect the tester to an electrical ground (safety ground). If the output to a conveyer or peripheral device that is connected to an earth ground or a nearby commercial power line is short-circuited without grounding, the tester chassis is charged to an excessively high voltage, resulting in extreme danger.
This tester is designed as a Class Ⅱ equipment (equipment protected against electric shock with protective grounding in addition to basic insulation). Therefore, electric shock may occur without proper grounding.

To ensure safety, be sure to ground the tester.
Choose either of the following two available methods of doing so:
1. Connect the AC power cord to a three-contact grounded electrical outlet.
2. Connect the protective conductor terminal on the rear panel to the earth ground.
Have specialized engineers select, manufacture, and install cables.
To ensure secure connection, use proper tools.

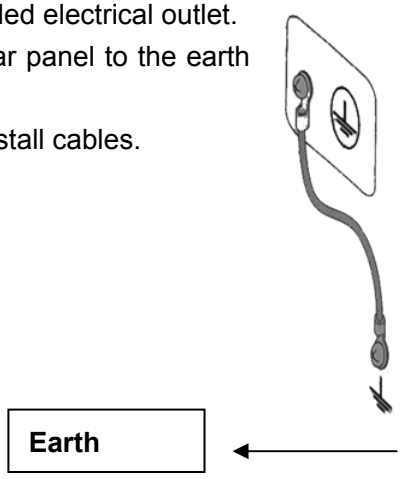

1.7 Checking Operations

⚠ **WARNING:** Use the interlock jumper only to quickly cancel the protection status.
When using this tester in a cramped working space, make a box-like structure for the DUT; when testing a complicated large-scale DUT, provide a cover or other means for the DUT to prevent electric shock by cutting off the output when the cover is opened. It is also recommended that an enclosure be provided around the operating area and that output be cut off every time the door is opened.
Before turning on the power, confirm that the allowable voltage range indicated on the power supply is the same as that indicated on the rear panel of the tester.
When the power is turned on, the tester lights all LEDs on the front panel and self-diagnosis is started.
Before starting up the tester, confirm that all LEDs are on to ensure safety.
It is particularly dangerous to start a test when the DANGER lamp is broken.
Note that, in self-diagnosis, even when the **DANGER** lamp is lighting, no output or voltage is being generated.

⚠ **CAUTION:** After turning off the POWER switch, wait several seconds before turning it

on. Turning the POWER switch on/off repeatedly with insufficient intervals may damage the tester.

Checking procedure:

1. Confirm that the allowable voltage range indicated on the power supply is the same as the input voltage range set by the fuse holder.
2. Confirm that the AC power cord is properly connected to the AC LINE connector on the rear panel.
3. Plug in the AC power cord.
4. Turn on the POWER switch. Confirm that all LEDs on the front panel are lit. Following the opening screen, display the ACW screen.
5. Following the opening screen, display the ACW screen and confirm that the tester is kept in the READY status.
6. Turn on the POWER switch again.

Opening screen：

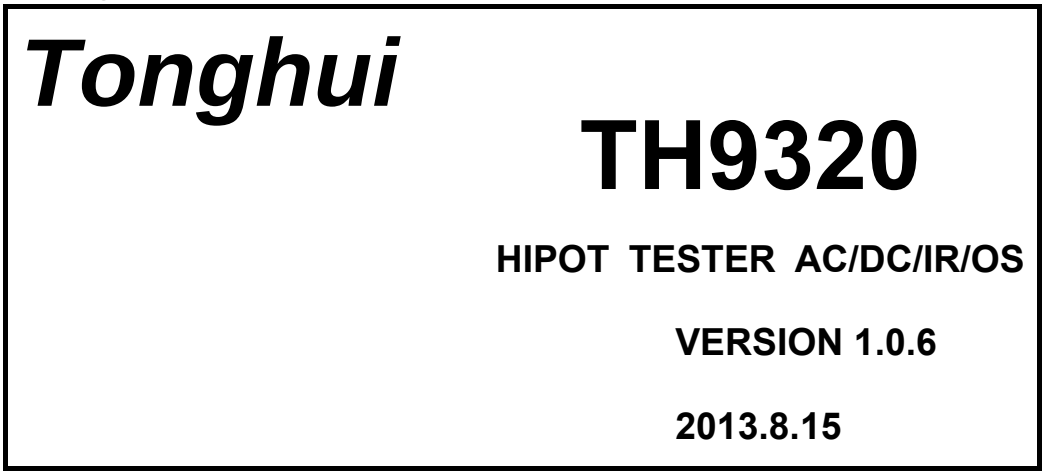

1.8 Other Specifications

1. Power: ≤500VA (TH9320/A/B)
   ≤400VA (TH9310/A/B)
2. Dimensions(W*H*D): 340mm*120mm*450mm;
3. Weight: approx. 15kg(TH9320/A/B); approx. 13kg(TH9310/A/B).

Chapter 2 Precautions on Handling

This chapter describes the precautions to be followed in the handling of this tester.
When using the tester, take utmost care to ensure safety.

⚠ **WARNING :The tester derivers a 5 kV test voltage which can cause human injury or death. When operating the tester, be extremely careful and observe the cautions, warnings, and other instructions given in this chapter.**

2.1 Prohibited Operations

▪ Do not turn on/off the power repeatedly

After turning OFF the power switch, be sure to allow several seconds or more before turning it ON again. Do not repeat turning ON/OFF the power switch rapidly. If you do this, the protectors of the tester may not be able to render their protective functions properly. Do not turn OFF the power switch when the tester is delivering its test voltage–you may do this only in case of emergency.

▪ Do not short the output to the earth ground

Pay attention so that the high test voltage line is not shorted to a nearby AC line or nearby devices (such as conveyors) which are connected to an earth ground. If it is shorted, the tester chassis can be charged up to the hazardous high voltage. Be sure to connect the protective grounding terminal of the tester to an earth line. If this has been securely done, even when the HIGH VOLTAGE terminal is shorted to the LOW terminal, the tester will not be damaged and its chassis will not be charged up to the high voltage.
Be sure to use a dedicated tool when grounding the protective grounding terminal.

⚠ **CAUTION:** The term "AC line" here means the line on which the tester is operating. That is the line to whose outlet the AC power cable of the tester is connected. It may be of a commercial AC power line or of a private-generator AC power line.

▪ Do not apply an External Voltage

Do not apply a voltage from any external device to the output terminals of the tester. The analog voltmeter on the front panel cannot be used as stand-alone voltmeter. They may be damaged if their output terminals are subject to an external voltage.

2.2 Action When in Emergency

In case of an emergency (such as electric shock hazard or burning of DUT), take the following actions. You may do either (a) or (b) first. But be sure to do both.

1. Turn OFF the power switch of the tester.
2. Disconnect the AC power cord of the tester from the AC line receptacle.

2.3 Precautions on Testing

▪ Wearing Insulation Gloves

When handling the tester, be sure to wear insulation gloves in order to protect yourself against high voltages. If no insulation gloves are available on your market, please order Kikusui distributor/agent for them.

▪ Precautions for Pausing Tests

When changing test conditions, press the STOP switch once to take precautions. If you are not going to resume the test soon or if you are leaving the Test area, be sure to turn-OFF the POWER switch.

▪ Items Charged Up to Dangerous High Voltages

When in test, the HV output, HV test leads, HV probes, DUT and output terminals and their vicinities can be charged up to dangerous high voltages. Never touch them when in test.

⚠ **WARNING：** The vinyl sheaths of the alligator clips of the test leadwires which are supplied accompanying the tester have no sufficient insulation for the high test voltages. Never touch them when in test.

▪ Matters to be Sure of After Turning-OFF Power

If you have to touch the DUT, test leadwires, probes, and/or output terminals and their vicinities for re-connections or other reasons, be sure of the following two matters.

1. To confirm that the working condition is not in test mode.
2. The **DANGER** lamp has gone out.

▪ Warnings for Remote Control

Be extremely careful when operating the tester in the remote control mode in which the dangerous high test voltage is ON/OFF-controlled remotely. The operator cannot know the real working condition of the instrument through the interface. **Please pay special attention to check the reliable connection of the remote control:**

1. The “**STOP**” switch must be connected reliably. Press the “STOP” switch before changing the DUT.
2. When testing in a working environment with a lot of people, remote control switch has the “**INTLOCK**”switch and HV lamp. Disconnect the “**INTLOCK**” switch before changing the DUT.

Provide means to assure that none can touch the DUT, test leadwires, probes, output terminals

and their vicinities when the test voltage is being delivered.

2.4 Warning for Residual High Voltages

⚠ **WARNING**: In DC withstanding voltage testing and insulation resistance testing, the test lead wire, test probe, and DUT are charged to a high voltage. The tester is equipped with a discharge circuit, but some time is nonetheless required to discharge them after the output is cut off. There is a danger of electric shock during discharge. To avoid electric shock, take the utmost care to ensure that the DUT, test lead wire, probe, and highly charged parts around the output terminal are not touched. If it is necessary to touch them, be sure to confirm the **DANGER** lamp has gone out.

As soon as the output is cut off, the tester's discharge circuit starts forced discharging. Do not disconnect the DUT during a test or prior to completion of discharging.

Under normal circumstances, it can be guaranteed that the test loop voltage is within the safe voltage range when finishing discharging. When the capacitance of the DUT is too large or the structure of the DUT is special, it may leads to incomplete discharge. In order to ensure complete discharge, test method must be changed by technical personnel.

☺ **Discharge time:**

Computational formula of discharge time: t = -ln（30 / U）×R×C

t: discharge time

30: discharge residue safty voltage 30V

U: test set voltage

R: discharge impedance of the DUT, the discharge impedance of the instrument is approx. 10k

C: capacitance of the DUT

In general, only DC high voltage test needs discharge and the length of the discharge time varies according to the properties of the DUT.

If the test terminated normally, the voltage will drop to zero according to the voltage fall time. If the test failed, discharge of the DUT is conducted by the transformer secondary winding(resistance of approximately 10k). Approximately 0.05s are required for 1uF capacitor with high voltage of 6000V to discharge to 30V. The fixed discharge time of the instrument is 0.2s, which ensures complete discharge of the device.

2.5 Dangerous States of Failed Tester

Typical possible dangerous states of the tester are as shown below and in which cases the most dangerous situation that **"the high test voltage remains delivered and the instrument get out of control"** may occur. When this situation has occurred,

1. Immediately turn OFF the power switch and disconnect the AC power cable from the AC line receptacle.
2. Immediately keep far away from the instrument and confirm no risk of the test circuit by the technical personnel; or keep the instrument still for more than one hour and confirm no output voltage in the test terminal.
3. Remove the relevant connecting lines and send the instrument back to us for maintenance.

⚠ **WARNING:** Keep away from the instrument after turning off the power and prevent other people from approaching. Do not immediately disassemble the test circuit. Immediately call our distributor or agent. High voltage may remain in the interior of the instrument. It is hazardous for an unqualified person to attempt to troubleshoot any tester problem.

2.6 To Ensure Long-Term Use without Failures

The withstanding voltage-generating block of the tester is designed to release half the rated amount of heat, in consideration of the size, weight, cost, and other factors of the tester. The tester must therefore be used within the ranges specified below. If you deviate from these ranges, the output block may be heated to excess, activating the internal protection circuit. Should this happen, wait until the temperature returns to the normal level.

Output requirements for withstanding voltage testing

Ambient temperature	Upper current		Pause Time	Output time
T≤40℃	AC	>12mA (TH9320/A/B) >6mA (TH9310/A/B)	At least as long as the output time	Maximum of 1 minute
		<8mA (TH9320/A/B) <4m (TH9310/A/B)	Not necessary	Continuous output possible
	DC	>6mA (TH9320/A) >3mA (TH9310/A)	At least as long as the output time	Maximum of 1 minute
		<4mA (TH9320/A) <2mA (TH9310/A)	At least as long as the charging wait time (WAIT TIME)	Continuous output possible

Note: Test time <= **Output time** <= voltage rise time + test time + voltage fall time

2.7 Daily Checking

To avoid accidents, confirm at least the following before starting operation:

1. The input source complies with the standard and the tester power configuration is correct.
2. The tester is connected to an earth ground.
3. The coating of the high-voltage test lead wire is free from cracks, fissures, and breakage.
4. Without connecting the test lines, the instrument can finish the test successfully when starting test by default.
5. The tester generates FAIL signal when the ends of the low-voltage test lead wire and high-voltage test lead wire are short-circuited.

Chapter 3 Part names and Functions

This chapter describes the names and functions of components such as switches, displays, and connectors on the front and rear panels.

3.1 Front Panel

Figure 3-1 gives a brief description of the front panel for TH9310/20 series.

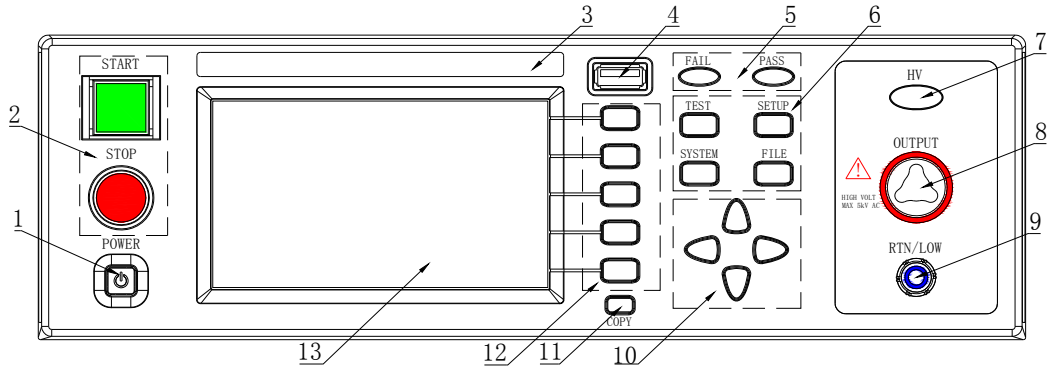

Figure 3-1

3.1.1 POWER

Power switch. **Operators should check the power types and whether the test line connections are normal.**

3.1.2 START and STOP

START (square): Start up the instrument, once test starts, “TEST” will be displayed at the left corner of the screen, TEST indicator lights.

STOP (circle): Stop key, used to cancel the test, or PASS, FAIL status.

3.1.3 Band and Model

Band and model.

3.1.4 USB Interface

Externally connect to USB storage.

3.1.5 Indicator

● **FAIL**

When the test data exceeds the set data in test, the instrument will lights in FAIL.

● **PASS**

When the test data does not exceed the set data after the test, the instrument will lights in PASS.

When time function is off (TIMER OFF), there is no PASS judge. The test can be finished only by pressing the ‘STOP’ key.

3.1.6 FUNCTION

Select mode, system and interface.

● **TEST**

Press the key and the corresponding key lights, the instrument is ready to test.

● **SETUP**

Press the key and the corresponding key lights, the instrument enters parameter setting;

● **SYSTEM**

Press the key and the corresponding key lights, the system setting interface will be displayed;

● **FILE**

Press the key and the corresponding key lights, the file operation interface will be displayed;

3.1.7 HV

DANGER！！It lights in test, indicating the test is underway.

3.1.8 Output voltage HIGH terminal (HV)

High voltage output of the high voltage test interface.

3.1.9 Test low terminal, test current return terminal (LOW/RET)

Voltage output terminal and current sampling terminal of the test.

3.1.10 Move key

It is used for moving cursor on the screen.

3.1.11 Shortcut key

F1-F5, corresponding with the function operation area on the right of the LCD.

3.1.12 COPY key

COPY key can copy the screen pictures to the USB storage. The USB starage should be inserted into the USB jack on the front panel in advance.

3.1.13 LCD screen

480*272 TFT dot- matrix LCD screen, display setting and test interface, etc.

3.2 Instruction of rear panel

Figure 3-2 gives a brief description of the front panel for TH9310/20 series.

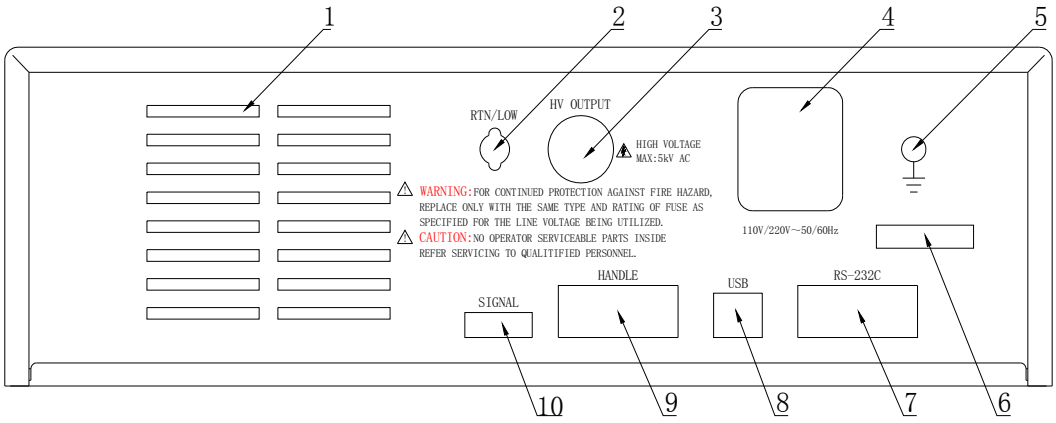

Figure 3-2

3.2.1 Fan

Power amplifier circuit radiator.

3.2.2 Test low terminal, test current return terminal (optional)

Stand-by test low terminal of high voltage test interface.

3.2.3 High voltage output terminal (optional)

Stand-by high voltage output terminal of high voltage test interface.

3.2.4 Power jack: with fuse holder, switchable line voltage mode

Be used to input AC power. Please use the voltage within the specified input voltage range and please use the attached power line with fuse. Change the fuse according to input power.

Please choose different installation position according to different input power type. Please pay attention to the visible identification on the outer shell of the fuse holder when installing.

NOTE: The instrument supports 110 and 220 line voltage modes only. Other modes are not connected in the interior of the instrument.

3.2.5 Protective earth terminal

Be used to connect instrument to ground.

NOTE: The three-pin power jack of the instrument can not guarantee reliable connection to the ground. The protective earth terminal must be used to connect the instrument to grounding bar.

3.2.6 Mark

This mark describes the serial number of the instrument.

3.2.7 RS232C serial interface

Serial communication, realize the communication with the computer.

3.2.8 USB serial communication interface

Realize the communication with the computer. Through this interface, the computer can control

the instrument by using the control instruction set.

3.2.9 HANDLER interface

Compared to PLC interface, the HANDLER interface has no INTERLOCK function in interface signal. It is more convenient than PLC interface to use 9 core model D jack to output. It is appropriate for the connection of general control circuit for multiple instruments.

- **TEST**：Output synchronized-signal control when high voltage output is started.
- **START**：Input the starting signal for starting high voltage output, corresponding to START signal on the front panel.
- **RESET**：Input the reset signal for stopping high voltage output, corresponding to STOP signal on the front panel.
- **PASS**：The output pass signal of the instrument, corresponding to PASS instruction on the front panel.
- **FAIL**：The output fail signal of the instrument, corresponding to FAIL instruction on the front panel.

3.2.10 SIGNAL interface

It is the interface for online protection and interior 24V power output.

- **INTERLOCK**：(COM(5) S+ -- (6) COM) valid in SHORT. It is the online locking signal of the instrument, if off, starting output is not allowed.
- **DC 24V Power:** (COM(1,2) 24V – (3,4) GND). It is used for requirement of indicator light and other control power supply.

3.3 Description

TH9320 Provide 5kVAC/20mA withstanding voltage, 6kVDC/10mA withstanding voltage and insulation resistance test.

TH9320A Provide 5kVAC/20mA withstanding voltage, 6kVDC/10mA withstanding voltage test.

TH9320B Provide 5kVAC/20mA withstanding voltage test.

TH9310 Provide 5kVAC/10mA withstanding voltage, 6kVDC/5mA withstanding voltage and insulation resistance test.

TH9310A Provide 5kVAC/10mA withstanding voltage, 6kVDC/5mA withstanding voltage test.

TH9310B Provide 5kVAC/10mA withstanding voltage test.

The principle structure of the instrument: In high voltage module, there is a DA standard, controllable forcing function generator, AB power amplifier, 40~600Hz high voltage boost transformer and output voltage closed-loop control.

DA standard: ensure controllable output voltage amplitude.

Controllable forcing function generator: In AC output, set the operation in 50 or 60Hz，not being limited by line voltage.

Linear power amplifier: low distortion of the voltage waveform with easy control and high reliability.

40~600Hz high voltage boost transformer: to DC and insulation resistance test, the test instrument uses 600Hz AC to form DC voltage to be the power, which can assure the DC power ripple is far less than the formal withstanding voltage tester.

Output voltage closed-loop control: ensure small load regulation and reliable test data.

Software of the instrument: multiparameter continuous test and multiple upper computer control function.

TH9310/20 series not only can perform the independent AC withstanding test, DC withstanding voltage test, insulation resistance test, but also multi-item test via the setting of test programme.

TH9310/20 series all allocate HANDLER, RS-232C and USB, thus the instrument can adapt to the auto test system of different required safety and reliability.

Feature：

■ 4 test functions—AC withstanding voltage test, DC withstanding voltage test, insulation resistance test, open and short detection.

TH9310, TH9320 provide AC/DC withstanding voltage test and insulation resistance test.

TH9310A, TH9320A provide AC/DC withstanding voltage test.

TH9310B, TH9320B provide AC withstanding voltage test.

All the instruments have the open and short detection function.

Once connected with load, the tester can perform different tests continually.

■ 2 different test power selection

In TH9320 series high voltage module, there is a AB power amplifier circuit and a 100VA high voltage transformer, which can realize the output of 5kV/20mA (AC) and the output of 5kV/10mA (DC). The distortion of the waveform is less than 3%.

In TH9310 series high voltage module, there is a AB power amplifier circuit and a 50VA high voltage transformer, which can realize the output of 5kV/10mA and the output of 5kV/5mA (DC). The distortion of the waveform is less than 3%.

If continuous current output is set, in order to guarantee the reliability of the instrument, the maximum output time is 60 seconds when the output is more than 60% of the rated output current. If the output is within 60%~40% of the rated output current, the continuous working hours should be limited. If the output is less than 40% of the rated output current, it can ensure continuous working.

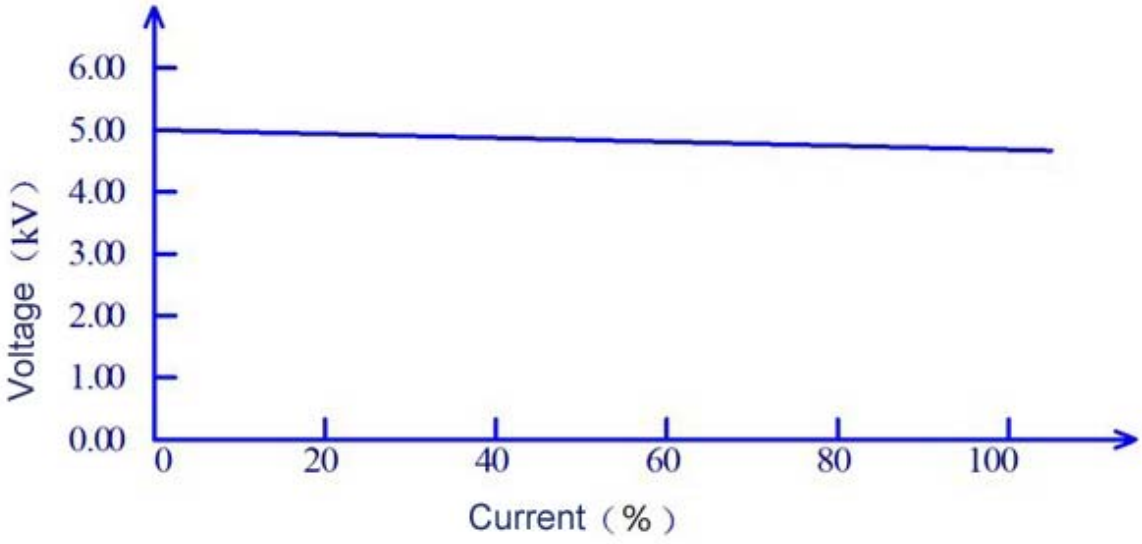

Figure 3-3 AC voltage load regulation

■ **DC withstanding voltage test 5kV/10mA（TH9320/A）5kV/5mA(TH9310/A)**

TH9310/20 series can provide DC withstanding voltage test of wide voltage range (Max. output DC is 6kV). The automatic voltage regulation and voltage load regulation of 600Hz frequency hardware is less than 1%+10V.

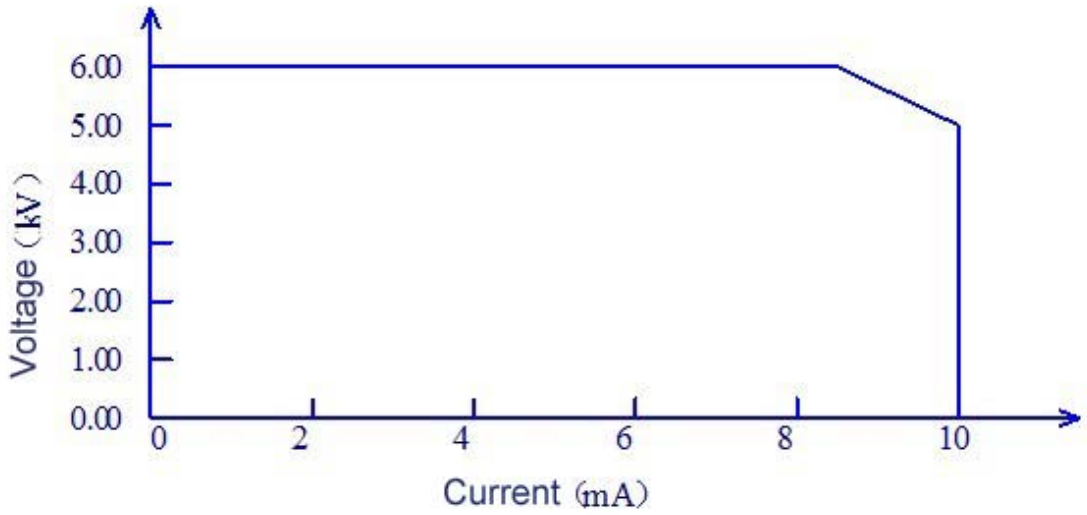

Figure 3-4 TH9320/A DC voltage output range

■ **Insulation resistance test 0.050kV to 1.000kV（resolution of 1V）/0.1MΩ to 10.0GΩ (Max. rated current of TH9320 is 10mA and max. rated current of TH9310 is 5mA)**

Insulation resistance test range:

When the voltage is less than 500V: 0.1MΩ to 1GΩ with accuracy of ±[10% reading +5 digits].

When the voltage is greater than 500V: 0.1MΩ to 100MΩ with accuracy of [5% reading +5 digits], 100MΩ to 1GΩ with accuracy of [10% reading +5 digits].

■ **Open and short detection: judge the reliability of the DUT before starting the high voltage to ensure the accuracy and safety of high voltage test.**

Open and short detection can judge the distribution impedance current of more than 100PF. When the current is less than this value, the current acquisition circuit resolution of the instrument can not distinguish the connection of open circuit and the test component accurately.

■ **RS-232C interface as the standard**

Except power switch, key lock and execution (auto), other functions can be controlled remotely. In DC withstanding voltage test, AC withstanding voltage test and insulation resistance test, judge and time can be controlled remotely. The test result can also be read via remote control. USB and RS-232C interface provides a stable and united standard test interface for PC or other devices.

■ **HANDLER and SIGNAL interfaces bring convenience for the connection and control.**

HANDLER interface can input **START** and **STOP** signals and output **TEST**, **PASS** and **FAIL** signals. Connecting with a footswitch, they can construct a foot-control device; while connecting with simple test fixtures, they can realize safety interlock, air controls, test indication, etc.

SIGNAL interface can input **INTERLOCK** signal and provide 24V, 1A power output. It is convenient for control and connection.

■ **USB interface for backup**

Through the USB interface equipped by all testers, tester programmed test programmes and customer's measuring file can be saved to or recalled from an external U disk, which is convenient to set, use and file a batch of testers.

■ **Waiting time setup function**

The instrument can set the test waiting time from 0.1s to 999.9s by a resolution of 0.1s. In this period, the tester will output TEST control signals. They are used to control external devices and ensure a reliable connection. After that high voltage measurement will be enabled.

■ **Rising time control function**

In AC withstanding voltage test, DC withstanding voltage test and insulation resistance test, the test voltage can be raised to set value slowly, it can't provide set voltage to DUT instantly after test starts. The voltage rise time is from 0.1s to 999.9s and the resolution is 0.1s. TH9310/20 series meet each UL test standard and IEC withstanding voltage standard （primary voltage is less than the half of test voltage and it can appoint the fixed rising time when reaching the set test voltage.

■ **Fall time control function**

In the pass judge of AC withstanding voltage test, the test voltage can be reduced gradually. The voltage fall time can be set within 0.1s to 999.9s (with the resolution of 0.1s).

■ **Discharge function**

In common condition, the DUT reacts the feature of capacitance. At the moment of the cut of DC withstanding voltage and insulation resistance test, the DUT holds the full charge status, so there is a danger of electric shock..TH9310/20 has the enforced rapid discharge function after DC withstanding voltage test and insulation resistance test finish.

■ **Reinforced safety**

In order to improve the safety, TH9310/20 series allocate many devices and safe functions including safe output terminal, discharge function and ground wire current detection. The ground wire current detection means in high voltage test circuit, when return current flowing through shell is larger than 0.45mA, the high voltage output will be cut off, thus there will be

no shock current in high voltage to protect the operator's safety.

■ **Higher test accuracy**

TH9310/20 series is voltage digital display, in withstanding voltage test, the accuracy is ± (1%reading +5V), in insulation resistance test, is ± (1% reading +2V). The digital display of test current is ± (1% reading +5 digits) in withstanding voltage test.

■ **Current correction function**

AC withstanding test needs high sensitivity and voltage, the stray capacitance effects the accuracy of current test.TH9310/20 series has the current correction function to eliminate the moving current.

■ **Easy operation**

TH9310/20 series are quite easy to be operated. In the setup interface, all the test parameters are listed. Use direction keys to select a parameter from the LCD display and then use function button to change the parameter. After setting the data, it will back to test interface to perform test.

■ **20 test programmes, and each one includes 16 test items, so it can save 320 test items totally.**

It can edit 20 test programmes which corresponds to user's different test items; each item includes 16 test items and the test item is one of AC withstanding voltage test, DC withstanding voltage, insulation resistance test as well as open and short judge. Each test condition is noninteractive; in file operation interface, the storage file of the instrument can be transferred to the computer or another congeneric instrument through external U-disk .

Instruction for options:

■ **High voltage output terminal on the rear panel (Optional)**

On the rear panel, there is an optional high voltage output which provides convenient schemes for installing the wiring of the instrument on the machine cabinet.

⚠ **WARNING**:

The instrument applies 5kV AC/DC high voltage, so do not touch the DUT and test line, or it will cause the danger of electric shock.

The safe measures should be taken around DUT to assure the operator's safety. Otherwise, please be care about the outputted high voltage due to the incorrect connection and operation.

Chapter 4 Basic operation

4.1 Interface structure overview

This chapter describes the operation of withstanding voltage and insulation resistance.
The following figure is the interface structure:

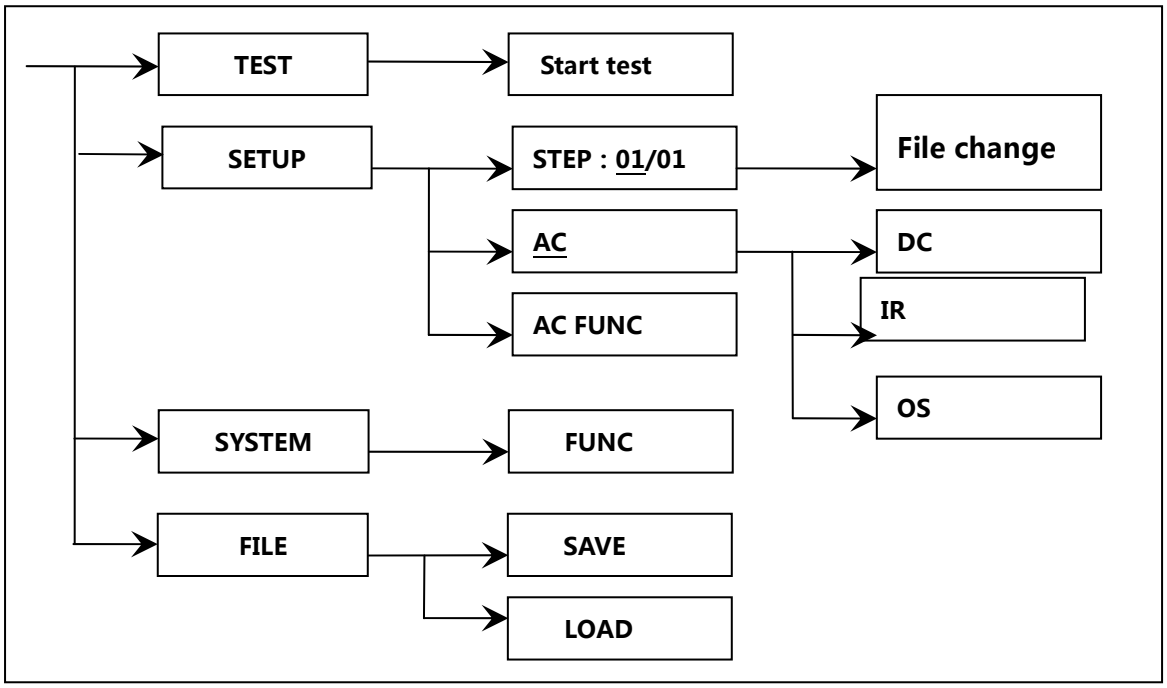

Operation Steps

Introduction to the interface:

- The first line in the interface structure shows the initial states corresponding to the function keys on the panel (see sections 4.3, 4.4 for more details.) The TEST interface cannot modify parameters.
- The second line in the interface shows the parameter structures of the initial interface. For example: STEP 01/01 in the SETUP interface means that it is the step 1 of the programme and the total steps is 1; AC: means the AC withstanding voltage test interface; AC parameter means that other parameters are AC withstanding voltage test parameters.
- The third line in the interface is the function toggle interface. When some function lablels are selected in the second interface, the corresponding functions can be changed and their relative parameters will also vary. For instance, changing AC to DC, the tester will change from the AC withstanding voltage test mode to the DC withstanding voltage test mode, and the current AC parameter will be changed into DC parameter.

4.2 Instruction of panel function interface and parameter

This section is mainly describe the function interface and relevant parameter in accordance with the order of sofeware process and interface relevance.

- **Initial state introduction of the instrument**

1. After starting up, the system enters into the last used setup interface before

shutdown last time.

2. **The default set of the instrument is single step, AC withstanding voltage and default parameters. As shown below.**
3. **The default cursor of the default interface is the interface switch. Other interface can be chosen directly.**

MEAS SETUP							
STEP:	01/01		**FUNC**	AC		**INS**	F1
VOLT:	0.050	kV	**UPPR:**	1.000	mA	**DEL**	F2
TIME:	0.5	S	**LOWR:**	OFF			
RISE:	0.5	S	**ARC:**	OFF		**NEW**	F3
FALL:	0.5	S	**FREQ:**	50	Hz		
						UP	F4
Message						**DOWN**	F5

Default interface diagram of the instrument

Four function keys can be directly used to realize the interface switch, namely TEST, SETUP, SYSTEM and FILE. The interface function will be introduced separately below.

- Basic function operation of panel:

TEST： Instrument enters waiting status, the high voltage test starts.

SETUP： Change the previous interface of test programme, test item, and test parameter. The change of test programme is finished in this interface.

SYSTEM： Enters the set interface related with test safety and the working mode.

FILE： Save and load the test programme, relating to the data storage.

θπτυ： Cursor can move freely among each parameter.

F1~F5： Change the selected data by coordinating with the contents in soft key function display zone.

4.2.1 SETUP

MEAS SETUP							
STEP:	01/01		**FUNC**	AC		**INS**	F1
VOLT:	0.050	kV	**UPPR:**	1.000	mA	**DEL**	F2
TIME:	0.5	S	**LOWR:**	OFF			
RISE:	0.5	S	**ARC:**	OFF		**NEW**	F3
FALL:	0.5	S	**FREQ:**	50	Hz		
						UP	F4
Message						**DOWN**	F5

Figure 4.2.1 AC setup interface

Modification Instruction of the test programme
STEP: 01/01 Test procedure: current setting No. / total items.
Item identification of the test programme, current test programme No./ total items

Key	Function	Instruction
F1	INS	Add a new test item. The current item and subsequent items will move one step backward.
F2	DEL	Delete the current test item. The subsequent item will move one step forward.
F3	NEW	Create a blank test programme (PROG). The system will automatically create a default test item. Please remember to save the test programme after finishing writing.
F4	+	Visit the parameter of the step after the current displayed step.
F5	-	Visit the parameter of the step before the current displayed step.

AC Current operating mode of test procedure is AC withstanding voltage.
The current working mode of the test item is AC withstanding voltage. Cursor in this position can switch to other working items by F1~F4, for instance **DC, IR and OS**.

NOTE:
For ease of use, press the 'START' key on this interface to enter into the test interface directly and simultaneously start testing according to the current set test programme.
If fault triggering of 'START' occurs, pull out of the INTLOCK jumper before changing the parameter to avoid danger.

For details of parameter modification of the test item, see 4.3 test item interface and parameter setup.

4.2.2 TEST (Take AC for example)

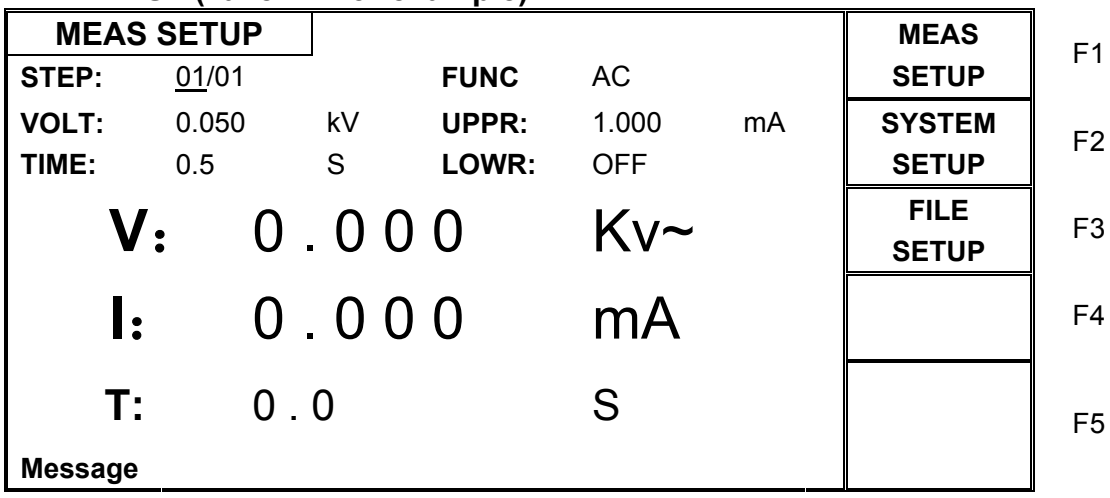

Figure 4.2.2 AC test interface

Note：

1. **The high voltage can only be started on this interface to test high voltage. Other test conditions have to been set on setup interface.**
2. **Press θ to enter the set interface.**
3. **The function key F5 can lock the keyboard. When the keyboard is locked, only three**

keys: START, STOP and F5 (unlock）are usable. Otherwise, the unlocking operation is also controlled by the PASSWORD function in the SYSTEM interface.

The three large font data in the middle of the front panel is the real time test data. After finishing testing, the last test result will be displayed on the panel before pressing the STOP key.

The top one is high voltage output voltage, the unit is (kV).

The middle one is the tested current of low terminal, the unit is (mA) and (uA).

The bottom one is the remained time in testing high voltage. If operator turns off the time control, the test time no less than 999.9S will be displayed. user can analyze the test condition of DUT with the unit of (S).

! Note：

Operator can not leave the test position if the tester is working;
In the process of testing, do not close to the test line or DUT.

4.2.3 SYSTEM

System interface is to set the test programme of the instrument, not the specific test component parameters.

SYSTEM Interface

SYSTEM SETUP					
PASS HOLD:	KEY	**BEEP VOL:**	**OFF**	**(+)**	F1
STEP HOLD:	KEY	**LANGUAGE:**	Chiness	**(-)**	F2
GFI:	OFF	**ADJ SET:**	OFF		
TEST MODE:	CONT	**STRT DLY:**	OFF		F3
TURN MODE:	ON	**OFFSET:**	ON		
DISP MODE:	DATA	**PASSWORD:**	OFF	**KEY**	F4
BUS MODE:	RS232C	**DEFAULT**			
BAUD RATE:	19200				
Time:	12 - 2 - 14	13 ： 14 ： 52		**ENTER**	F5
Message					

4.2.3.1 SYSTEM interface

Instruction：

Label	Instruction	Definition
PASS HOLD:	0.2S～99.9S	Pass judge hold time.
	KEY	Press ‘STOP’ key to finish it.
BEEP VOL	OFF	None
	L OW LONG	Low and long volume
	TWO SHORT	Two short volume
STEP HOLD:	0.2S～99.9S	Waiting time.
	KEY	Press ‘START’ key to test the next item.
LANGUAGE:	CHINESE, ENGLISH	Interface language selection.
GFI:	ON , OFF	Ground wire current detection function.

ADJ SET:	SET	Adjustment interface.
TEST MODE:	STOP	Use 'STOP' to quit in fail result.
	CONTINUE	Continue the next step in fail result.
	RESTART	Press 'START' to retest in fail result.
	NEXT	Press 'START' to continue the next step in fail result.
STRT DLY	0.1~99.9S	Set the test delay time from srarting test to the beginning of the test of item No.1.
	OFF	By default, the instrument start testing after being ready.
TURE MODE	ON	The voltage output allows fine tuning. **NOTE : When this mode is set as ON, ARC will result in erroneous judgement.**
	OFF	By default, the output voltage can not be tuned during the test.
OFFSET	OFF~ON	Set the clear of base number.
	GET	Obtaining the base number under the current test condition.
DISP MODE	P/F	Big character display PASS or FAIL.
	DATA	Display the last data under the test mode. Small character display PASS or FAIL.
PASSWORD:	OFF	Key lock setup. The default password is **9310.**
	SYSTEM (lock system)	Entering the system needs the password.
	FILE (lock file)	File load needs the password.
	Modification	Change the original password for the new password.
DEFAULT		Restore factory defaults. **Not valid on PASSWORD.**
BUS MODE:	RS232C	Serial mode: data format: 8.n. 1
	USBTMC	Standard USB slave mode
	USBVCOM	USB analog serial mode: data format: 8.n. 1
BAUD:	9600~115200	Baud rate of the serial bus.

NOTE: steps for system upgrade of the instrument:

1. **Insert the USB-disk with the upgrade file.**
2. **Log-in the system interface and enter into the system password item.**
3. **Set the lock system function as ON and input the system lock password. The default password is 9310.**
4. **Restart the instrument.**
5. **Enter into the system password keyboard(F5) and input the start-up system upgrade password. The password is 93102013.**
6. **The system will start upgrading automatically. It will reboot automatically after finishing upgrading.**
7. **Enter into the lock system keyboard(F5) and input the system lock password. The default password is 9310.**
8. **Log-in the system interface and enter into the system password item.**
9. **Set the system password function as OFF and input the password. The password is 9310.**

4.2.4 FILE

Press the FILE key to enter into the file manage interface as follows:

<INTERNAL FILE>					
1	FILE-N1.STA	2011/ 11/11	11 : 11	**Internal File**	F1
2	FILE-N2.STA	2012/ 05/ 20	13 : 14	**External File**	F2
3	FILE-N3.STA	2013/09/19	19 : 09	**Exit**	F3
4	FILE-N4.STA	2099/ 09/ 09	09 : 09		F4
	PAGE 1				F5

4.2.4.1 FILE interface

Instruction:

Serial number	Description		Shortcut option	Definition
1	Memory selection	F1	Internal	Internal file interface.
		F2	External	External file interface.
2	File list	F1	Load	Load the current file as the internal use file.
		F2	Save	Save the internal use file to the current file.
		F3	Delect	Delete the current file.
		F4	Copy To E:	Copy the current file to the U-disk (internal file).
			Copy To I:	Copy the current file to the interior instrument (external file).
		F5	Select	Select the current file (be used for batch processing)
3	Page number		PgUp	Pageup the file list.
			PgDn	Pagedown the file list.

Operation interface of the internal file:

<INTERNAL FILE>					
1	FILE-N1.STA	2011/ 11/11	11 : 11	**Load**	F1
2	FILE-N2.STA	2012/ 05/ 20	13 : 14	**Save**	F2
3	FILE-N3.STA	2013/09/19	19 : 09	**Delect**	F3
4	FILE-N4.STA	2099/ 09/ 09	09 : 09	**Copy To E:**	F4
	PAGE 1			**Select**	F5

4.2.4.2 Operation interface of the internal file:

Operation interface of the external file:

<EXTERNAL FILE>				
STA	2011/ 11/11	11 : 11	**Load**	F1
FILE-A1.STA	2012/ 05/ 20	13 : 14	**Save**	F2
FILE-A2.STA	2013/09/19	19 : 09	**Delect**	F3
FILE-A3.STA	2099/ 09/ 09	09 : 09	**Copy To I:**	F4
PAGE 1			**Select**	F5

4.2.4.3 Operation interface of the external file:

4.3 Test item interface and parameter setup

This section describes each test function parameter and its definition of the setup interface to help the customer set the revelant parameters.

4.3.1 AC withstanding voltage test parameter setup：

MEAS SETUP							
STEP:	01/01		**FUNC**	AC		**AC**	F1
VOLT:	0.050	kV	**UPPR:**	1.000	mA	**DC**	F2
TIME:	0.5	S	**LOWR:**	OFF		**IR**	F3
RISE:	0.5	S	**ARC:**	OFF		**OS**	F4
FALL:	0.5	S	**FREQ:**	50	Hz		F5
Message							

Figure 4.3.1 AC setup interface

Instruction:

VOLT:	0.050~5.000kV	Voltage value of AC high voltage test
UPPER:	0.001~20.00mA	Current upper limit value of AC withstanding voltage (TH9320 series)
	0.001~10.00mA	Current upper limit value of AC withstanding voltage (TH9310 series)
LOWR:	0.001~20.00mA	Low limit current value of AC, it must be smaller than the upper limit value (TH9320 series)
	0.001~10.00mA	Low limit current value of AC, it must be smaller than the upper limit value (TH9310 series)

	OFF	No requirement for the low limit value
ARC:	0.1~20.0 mA	Current Max. value of AC arc
	OFF	No requirement for the arc
TIME:	0.1~999.9S	Test time of AC withstanding voltage
	OFF	No requirement for the test time
RISE:	0.1~999.9S	Voltage rise time of AC high voltage test
	OFF	The minimum voltage rise time is 0.1s.
FALL:	0.1~999.9S	Voltage fall time of AC high voltage test
	OFF	The minimum voltage fall time is 0.1s.
FREQ:	50/60	AC working frequency

4.3.2 DC withstanding voltage test parameter setup :

MEAS SETUP							
STEP:	01/01		**FUNC:**	DC		**++**	F1
VOLT:	0.050	kV	**UPPR:**	1.000	mA	**+**	F2
TIME:	0.5	S	**LOWR:**	OFF			
RISE:	0.5	S	**ARC:**	OFF		**-**	F3
FALL:	0.5	S	**WAIT:**	OFF			
RAMP:	OFF					**--**	F4
						ENTER	F5
Message							

Figure 4.3.2 DC setup interface

Instruction:

VOLT:	0.050~6.000kV	Voltage value of DC high voltage test
UPPER:	0.1 uA~ 10.00mA	Current upper limit value of DC withstanding voltage (TH9320/A)
	0.1uA～5.00mA	Current upper limit value of DC withstanding voltage (TH9310/A)
LOWR:	0.1 uA ~10.00mA	Current low limit value of DC withstanding voltage, it must be smaller than the upper limit value (TH9320/A)
	0.1uA～5.00mA	Current low limit value of DC withstanding voltage, it must be smaller than the upper limit value (TH9310/A)
	OFF	No requirement for the low limit value
TIME:	0.1~999.9S	Test time of DC withstanding voltage
	OFF	No requirement for the test time
RISE:	0.1~999.9S	Voltage rising time of DC high voltage
	OFF	The minimum voltage rise time is 0.1s.
FALL:	0.1~999.9S	Voltage down time of DC high voltage test
	OFF	The minimum voltage fall time is 0.1s.
WAT:	0.1~999.9S	DC charge waiting time
	OFF	No requirement for the charge of the components
ARC:	0.1~20.0 mA	Current Max. value of DC arc
	OFF	No requirement for the arc
RAMP:	ON	When the voltage rises, it allows current upper limit judgement
	OFF	No detection for the current upper limit, **but it allows current limit judgement**

▪ 4.3.3 Insulation resistance (IR) test parameter setup: (Figure 4.4.3):

MEAS SETUP						
STEP:	01/01		**FUNC:**	IR	**++**	F1
VOLT:	0.050	kV	**UPPR:**	OFF	**+**	F2
TIME:	0.5	S	**LOWR:**	0.1M		
RISE:	0.5	S	**RANG:**	AUTO	**-**	F3
FALL:	0.5	S			**--**	F4
					ENTER	F5
Message						

Figure 4.3.3 IR setup interface

Instruction:

VOLT:	0.050~1.000kV	Voltage value of IR test
UPPER:	0.1M~50.00G	High limit value of IR
LOWR:	OFF~0.1M~50.00G	Low limit value of IR, it must be smaller than the upper limit value.
TIME:	OFF~0.1~999.9S	Test time of IR.
RISE:	OFF~0.1~999.9S	Rise time of insulation voltage.
FALL:	OFF~0.1~999.9S	Fall time of insulation voltage.
RANG:	AUTO	Auto-range mode. The range changes with the test value.
TH9320	2uA, 20uA, 200uA, 2mA, 10mA	Fixed range mode. I=U/R can be used to estimate the accelerated the test speed and the increased test accuracy according to the range.
TH9310	1uA, 10uA, 100uA, 1mA, 5mA	

NOTE:

1. **When RANG is set as AUTO, the min. range switch time is 0.6s. Please pay attention to it!!**
2. **Current acquisition lags 20ms behind the voltage acquisition, so the displayed resistance value in rise time is smaller than the normal and the resistance value in fall time is larger than the normal value. Hereby instruction for your reference.**

4.3.4 Open and short detection (OS) parameter setup：

MEAS SETUP						
STEP:	01/01		**FUNC:**	OS	**GET**	F1
OPEN:	10	%	**STAN:**	NONE		F2
SHRT:	OFF					F3
						F4
						F5
Message						

Figure 4.3.4 OS setup interface

Instruction:

OPEN:	10% ~ 100% STEP:1%	Percentage of open judge value and standard value
SHORT:	OFF~100% ~ 500% STEP: 10%	Percentage of short judge value and standard value
STAN:	Previous standard value	Sampling standard value (see NOTE)
	GET	Acquisition of the distribution parameter as standard

Note:

1. **When the cursor is in the position as the table below, (F1) position displays (GET).**
2. **Press (F1) function key, the instrument enters standard value sampling status. The instrument outputs 100V voltage in sampling, and the current flowing through the DUT can be obtained within 2 seconds.(please be attention in voltage output)**
3. **The capacitance value here is not the real capacitance value, but the value of the sampled current being transferred via impedance. The value should be close to that of capacitor installed in the test terminal. (The sampling current is not only generated by capacitor)**

Setup of OPEN SHORT value:

The OPEN value is larger than the value when there is no connection with the DUT and smaller than the minimum value when there is connection with the DUT.

The SHORT value is larger than the maximum value when there is connection with the DUT and smaller than the value when having other short problems.

Example: take 3-coil inductance for example: the capacitance between 1-2 is 300P, the capacitance between 1-3 is 200P and 2-3 may short-circuit.

1. No connection with the DUT (GET): STAN=100P, confirmation of the OPEN value.
2. Repeated connection with the DUT, the data range of GET: STAN=350P~450P, confirmation of the standard value.
3. Short circuit in 2-3, the data range of GET: STAN=550P~650P, confirmation of the SHORT value.

Calculation of the parameter setting:

1. Supposing STAN=400P
2. OPEN value: lower limit=100P/400P=25%, upper limit=350P/400P=88%. 60% is recommended to take.
3. SHORT value: lower limit=450P/400P=112%, upper limit=550P/400P=138%. 125% is recommended to take.

4.4 Test function theory and instruction

This section describes the test theory and instruction of ground connection, ground wire current detection and arc detection according to the order of the test procedure.

Block flow diagram of the instrument

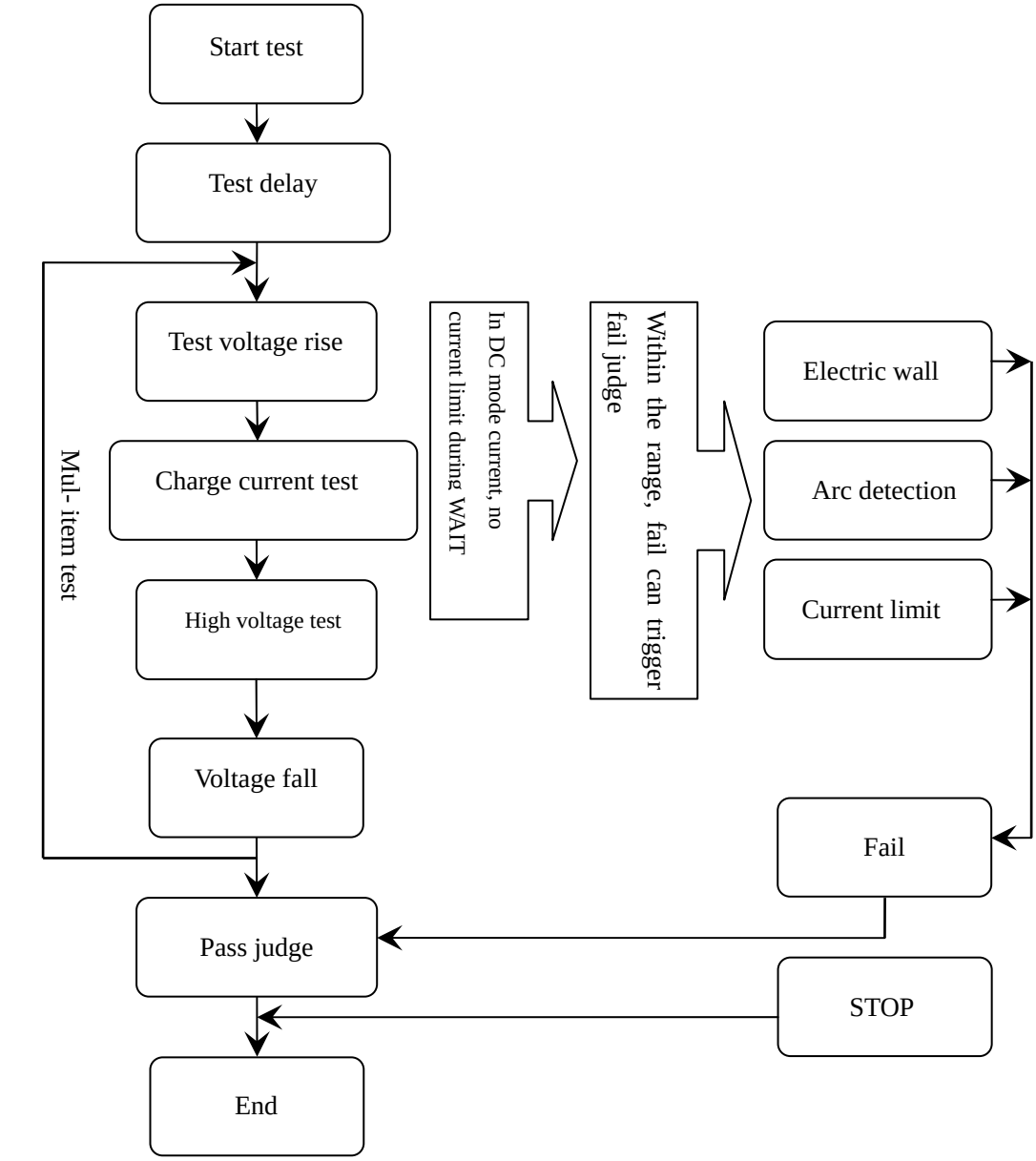

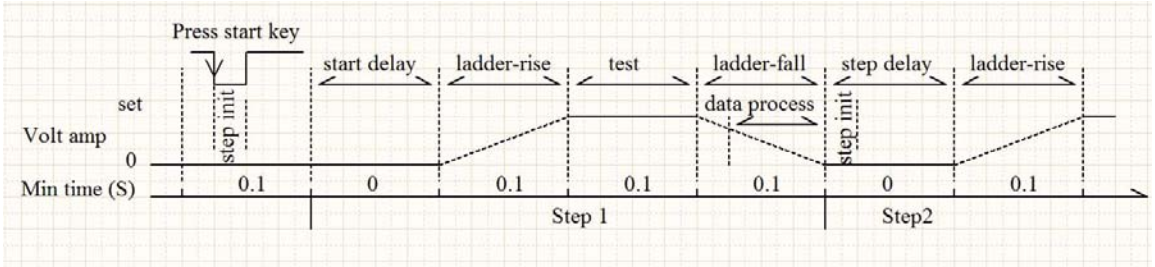

Output voltage waveform amplitude diagram

4.4.1 Start up test

In measurement mode, after the tester check the test conditions and the connection with DUT, press START to start up test.

4.4.2 Test delay

After the delay set by STA DELY in SYSTEM, the tester will start measurement.

4.4.3 Test voltage rise

Some DUTs are voltage-sensitive, so this function is useful. The output voltage rises from zero. The resolution of the output voltage, controlled by the instrument, varies in every 0.1S and depends on the test voltage and the voltage rise time (ΔV = V / (10*S)). If the voltage rise time (RISE OFF) is turned off, the default voltage rise time will be 0.1S.

4.4.4 DC RAMP

Using the current upper limit judge function in the process of the voltage rise is mainly to avoid erroneous judgement. When the test distributed capacitance is small, under the circumstance of no obvious change in current due to small charge current of the capacitance, RAMP can detect the poor performance of the DUT as soon as possible and decrease the discharge damage probability of the components. When the test distributed capacitance is large, there is a charging process of the capacitance in voltage rise process, now, the current may be far greater than the set current upper limit. If RAMP is set as ON, it may cause erroneous judgement of exceeding the upper limit.

4.4.5 High-voltage test

This function is used to make high-voltage test on DUT. The test circuit should be connected correctly. The measurement result will not be affected by special attach parameters and be the real withstanding-voltage current required by the test.

4.4.6 Voltage fall

It is the same as the voltage rise function depending on the characteristics of DUT. The voltage will fall when the high-voltage test ends. The resolution of the output voltage, controlled by the instrument, varies in every 0.1S and depends on the test voltage and the voltage rise time(ΔV = V / (10*S)). If the voltage fall time (FALL OFF) is turned off, the default voltage rise time will be 0.1S. At this moment, the instrument will not conduct test compare judgement and the data is for reference only.

4.4.7 Ground wire current detection function

Ground wire current detection is detecting the current flowing through the shell of the instrument to avoid electric shock. When high voltage is output, the current will flow back to the shell of the instrument from voltage output terminal. It may cause very serious consequences.

Circuit response instruction of ground wire current detection:

- When GFI is set as ON, it will be judged as electric shock when the ground wire current is larger than 0.45mA.
- When electric shock is judged, the instrument will end the high voltage output in 0.3s and quit the test mode. **GFI FAIL** will be displayed.

NOTE: when the ground wire current reaches 30mA, if electric shock is really judged, the condition is quite serious and may cause coma or death of the operator. Where permitted by the

product, it is recommended to turn on the ground wire current detection.

4.4.8 Current over limit and arc detection (ARC) function

Current over limit is divided as: current low limit, current high limit, current over limit and arc detection.

- Current low limit judge**(LOW):** generally for judging low terminal break. When instrument tests device, there must be a certain leakage current, when the leakage current is smaller than the set current value, it means fail, if the leakage current of DUT is quite small, then it is not necessary to turn off the function. It displays **(LOW FAIL)** in over limit. This judgement is valid only in the test mode and the timing sampling rate is 100mS/time.
- Current high limit judge **(HIGH):** When instrument tests device, there must be a certain leakage current, when the leakage current is larger than the set current value, it means fail. It displays **(HI FAIL)** in over limit. The timing sampling rate is 100mS/time.
- Current over limit**:** current sampling judge is slow and sometimes the current changes quickly so that sampling circuit can't reflect, otherwise, if current has passed the range of current test, it would trigger the over limit judge. It displays **(SHORT FAIL)** in over limit. **Because the data can not be collected after the current is in over limit, the output result is the test result before the current is in over limit.** The current limit value is twice the output current value allowed by the instrument (the relative AC is 1.5 times of the peak value). When the fall time is invalid, this judgement is nonmaskable.
- Arc detection (ARC): It is a practical function in coil component test, which tests the instant fire in partial circuit of high voltage. Because the speed of partial fire is quite fast, and the filter coefficient of common current detection circuit is so large that it can't make a suitable judge. Arc detection circuit filters out the normal current value and only deals with the change of fast current pulse. This function can only roughly estimate the degree of partial fire due to the randomness of lowpass filtering and arc. **Because the data can not be collected after the current is in over limit, the output result is the last test result when the current is in PASS.** It displays **(ARC FAIL)** in over limit.

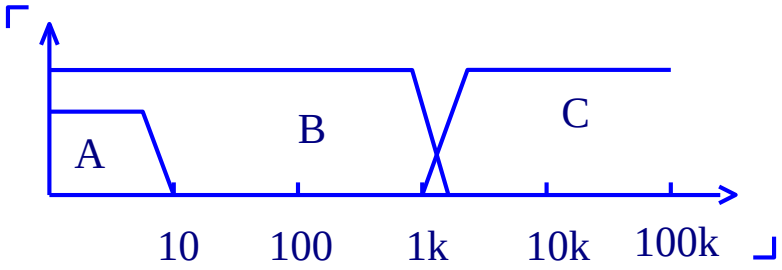

Current over limit judge and frequency response contrast of arc detection: (in the figure above)

- Zone A: Current sampling display circuit frequency response. Filtering out the power ripple → AD sampling → computation of the test result→ analyzing whether the current exceeds the limit setting. In the test current range, the pulse

width is greater than 100mS.

- Zone B: Current fast response circuit. This circuit only filters out high-frequency interference signal → voltage peak contrast → over-flow peak signal lock, only deals with limit judge. When the current is larger than the output current allowed by the instrument, the pulse width is greater than 1mS.
- Zone C: Arc detection circuit. This circuit only samples the mutational amplitude occurred in the current, signal high pass filters out low frequency → voltage peak contrast → pulse lock. When the current mutation rise is near the set value, the pulse width is about 1uS-1mS.

4.4.9 Fail judgment

When the test result exceeds the set limit of the test item or **transient current exceeds the maximum output current the instrument can bear**, the instrument will judge the DUT as a failure and the following results are: the current test is stopped, the voltage output is cut off, and the test result will be dealt with.

4.4.10 Deal with test results

If existing over limit in the test process, the instrument will judge the DUT as FAIL. There is mul-test item and the process mode of FAIL judge is controlled by the test mode of the system. Otherwise, FAIL and the fail reason (HI, as shown in below table) will be displayed and needs processing by the customer. When the test ends, if there is no FAIL mark, the instrument will judge the DUT as PASS and the process mode of PASS judge is controlled by PASS HOLD in SYSTEM. The instrument will transfer to the next test item or it will exit from the test waiting status.

From the beginning of this status to the next item starts high voltage, the customer can use the software to query the test data and results.

MEAS SETUP							
STEP:	01/01		**FUNC:**	AC		**MEAS SETUP**	F1
VOLT:	1.000	kV	**UPPR:**	1.000	mA	**SYSTEM SETUP**	F2
TIME:	0.5	S	**LOWR:**	OFF		**FILE SETUP**	F3
V:	1.000		Kv~				F4
I:	1.200		mA				F5
T:	0.0		S				
HI FAIL							

4.4.11 STOP

In any test mode, if you press down the “STOP” button on the instrument, it will automatically end the test. When the test ends, no measurement result will be output. **But in test end status, customer can query the test data before pressing the STOP button by using the software.**

4.4.12 OFFSET

Before testing, due to the change of working environment and position of the test cable, there may be some base numbers when the instrument is in no-load test. For some customers who pursuing accurate measurement can conduct zero clearing in SYSTEM interface. The specific steps are as follows:

1. Set the current test condition in SETUP interface.
2. Select OFFSET item in SYSTEM interface and set it as ON.
3. Press GET, the instrument will start high voltage test and treat the current test value as the zero position value.
4. Press “STOP” button to stop the test if the customer has not set the test time.

NOTE: when in GET, do not connect the product with the test terminal.

4.5 Structure and Use of HANDLER and SIGNAL Interface Circuit

4.5.1 Control interface theory

Interior theory of HANDLER and SIGNAL interface. See picture below:

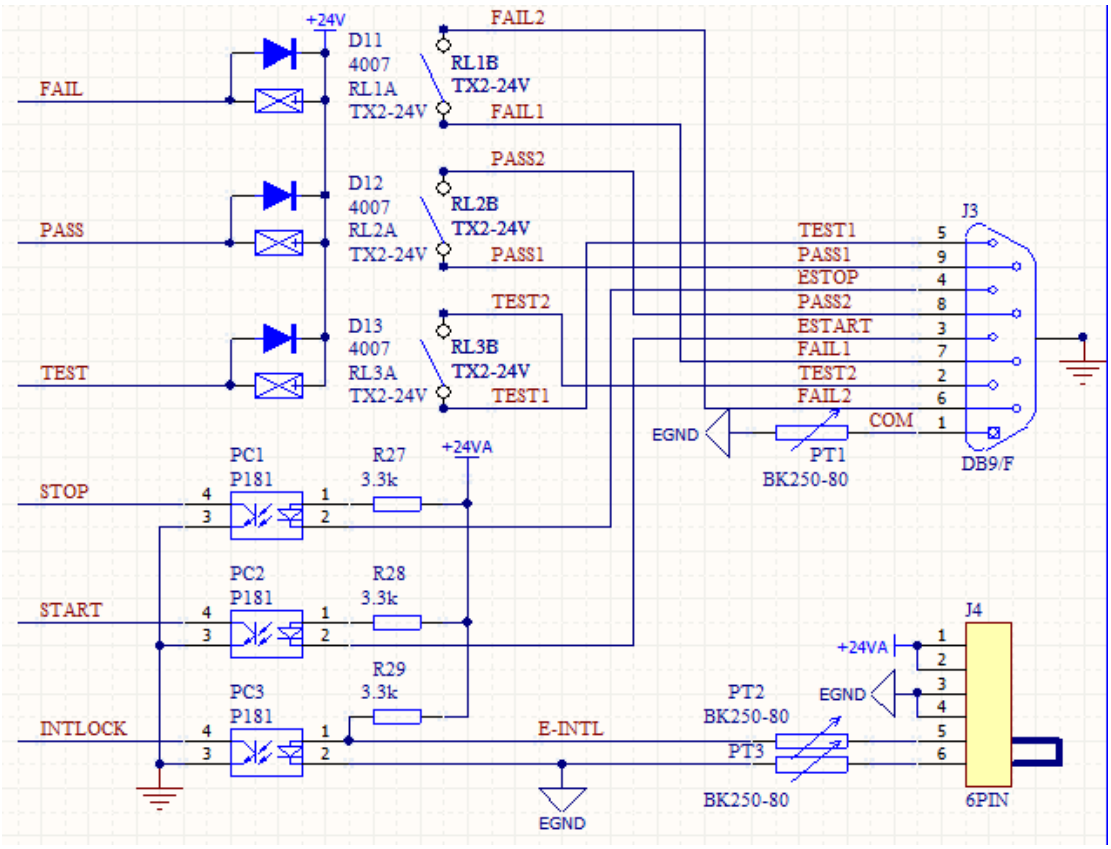

4.5.1: Structure and timing sequence of HANDLER and SIGNAL interface

Instruction:

10. HANDLER interface: START, STOP and COM signals makes up remote input control. It is valid in closing of switching input.
11. HANDLER interface: TEST, PASS and FAIL signals makes up remote output control. It is valid in closing of switching output. TEST can be used as the starting signal of high voltage or as the pulse signal when the instrument is in working order.
12. SIGNAL interface is mainly used as the selection signal (INTLOCK) of the instrument when

providing on-line testing of several instruments. The signal defaults to short circuit in one machine. It is forbidden to start high voltage output of the instrument when in open circuit.

13. SIGNAL interface additionally provides the power supply with +24V output voltage and 1A output current. Coordinating with HANDLER interface control signal, it can be used for driving indicator light, optoelectronic switch and miniwatt electromagnetic valve. (See picture below)

4.5.2 Control interface instruction

Control interface is generally used as remote control and test synchronization or indication. The external connection of the interface is as follows:

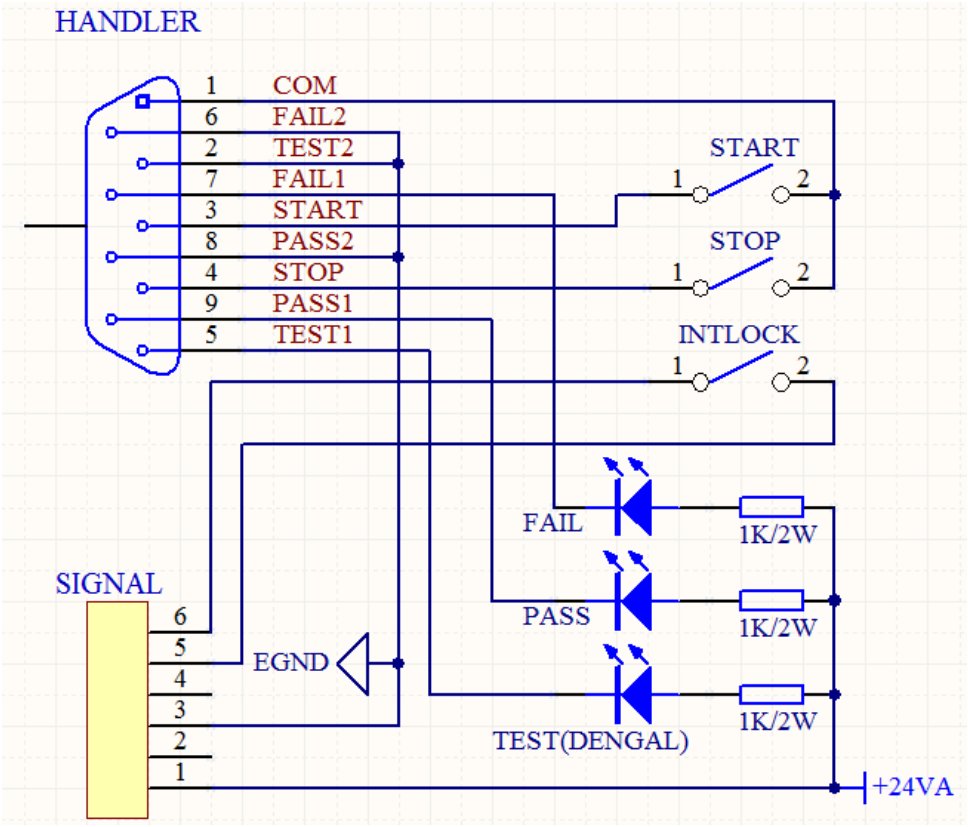

4.5.2 External circuit connection diagram

Instruction:

1. The switch can be replaced with secondary optical coupling and other isolated form switch element. For the current direction, refer to the principle of above diagram.
2. The indicator light can be replaced with other drive control components. The current direction is subject to the power. The maximum transient output current of the internal power shall not be larger than 1A and the current of long working hours shall be less than 0.5A. Self- contained power is necessary if larger current is needed. If the control need to be larger than 2A or 220V, the internal relay of the instrument can not bear it. Please transfer it by yourself.

4.6 Other interface and function

1. USB DEV on the front panel is used for connecting the U-disk, exporting and importing the setting files and upgrading the software.

2. USB HOST on the rear panel is used for the communication with the computer. There are two working modes.

a) USBTMC: standard USB slave mode. Compatible software format IEE488.

b) USBVCOM: USB simulated serial port, data format: 8.n.1. Compatible software format IEE485.

3. RS232 is used for the communication with the computer. See the baud rate in SYSTEM SETUP, data format: 8.n.1. Compatible software format IEE485.

4.7 Serial port commands instruction

4.7.1 SCPI commands

1. Data Conventions of This Manual

NR1 ： integer, for example:123

NR2 ： fixed number, for example: 12.3

NR3 ： floating number, for example: 12.3E+5

NL ： CR character, integer: 10

^END： EOI (end) signal of IEEE-488 bus.

Subsystem commands of TH9320/9310:

●DISPlay ●FUNCtion

●SYSTem ●MMEM ●FETC

4.7.2 DISPlay Subsystem Commands

DISPlay subsystem commands are mainly used to set the instrument display page.

The :DISPlay? query returns to the current page.

Command Tree:

DISPlay————————:PAGE MEASurement
MSETup
SYSTem
FLISt

The :PAGE command sets the display page.

The DISPlay:PAGE? qurey returns to the current page.

Command Syntax: DISPlay:PAGE <page name>

Functions of <page name> are as follows:

MEASurement	Set the display page to measurement display.
MSETup	Set the display page to measurement setup.
SYSTem	Set the display page to system setup.
FLISt	Set the display page to (internal) file list.

For example: WrtCmd(“DISP:PAGE MEAS”); Set the display page to measurement display.

Query syntax: DISPlay:PAGE?

Return format: <page name><NL^END>

<page name> refer to the above set value.

MEAS	Set the display page to measurement display.
MSET	Set the display page to measurement setup.

SYST	Set the display page to system setup.
FLISt	Set the display page to (internal) file list.

4.7.3 FUNCtion Subsystem Commands

FUNCtion subsystem commands are mainly used to set the test parameters of test function.

Command Tree:

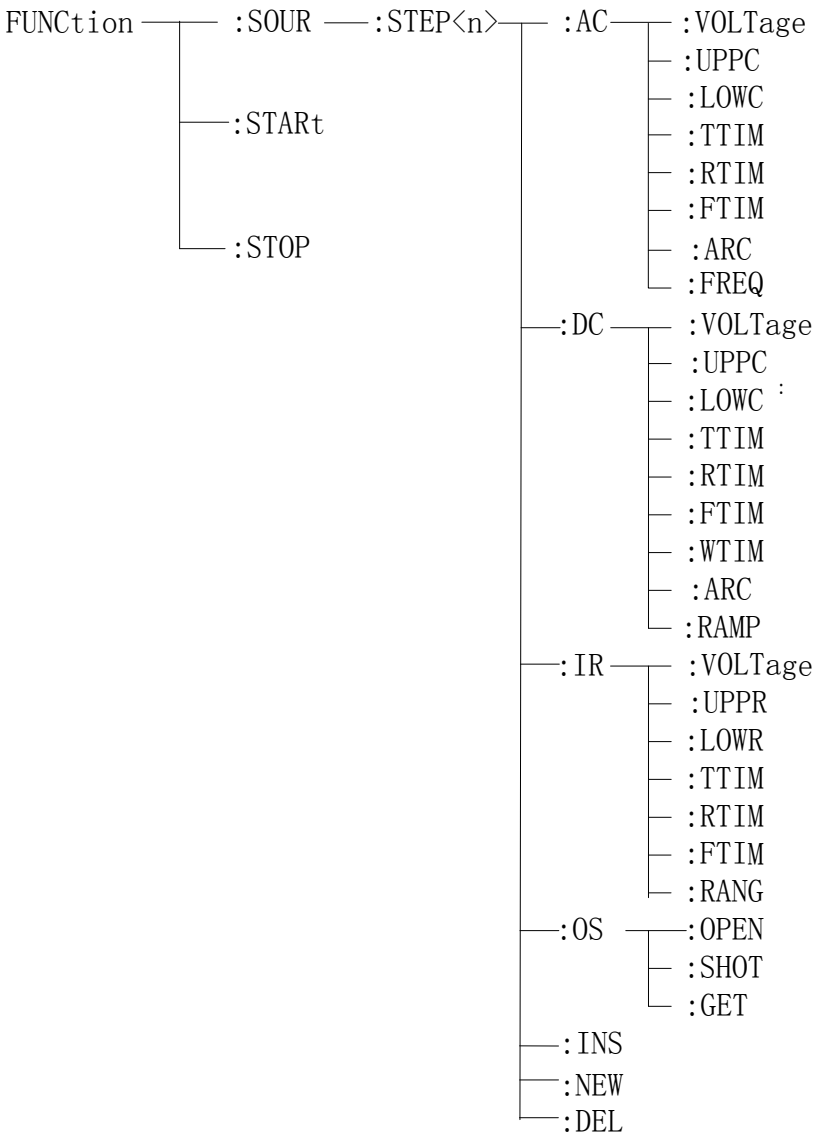

Commands for AC Setup Function

FUNC:SOURce:STEP:AC:VOLT

Sets the voltage for ACW test.

Also inquires about the voltage for ACW test.

--Syntax:

Command message:

FUNC:SOUR:STEP <sn>:AC:VOLT<voltage>

Query message:

FUNC:SOUR:STEP <sn>:AC:VOLT?

--Data<sn>:

Data format: integer

Data range:1~16

Data accuracy:1

--Data<voltage>:

Data format: float

Data range:50~5000

Data accuracy:1

Data unit:V

--Example:

Set the voltage for ACW test in STEP1 as 1000V.

FUNC:SOUR:STEP 1:AC:VOLT 1000

--Return message

FUNC:SOUR:STEP 1:AC:VOLT?

If the voltage for ACW test in STEP1 is 1000,

1000 is returned.

FUNC:SOURce:STEP:AC:UPPC

Sets the UPPER current for ACW test.

Also inquires about the UPPER current for ACW test.

--Syntax:

Command message:

FUNC:SOUR:STEP <sn>:AC:UPPC<current>

Query message:

FUNC:SOUR:STEP <sn>:AC:UPPC?

--Data<sn>:

Data format: integer

Data range:1~16

Data accuracy:1

--Data<current>:

Data format: float

Data range:1.00E-6~20.000E-3

Data accuracy:1.000E-6

Data unit:mA

--Example:

Set the current for ACW test in STEP1 as 1mA.

FUNC:SOUR:STEP 1:AC:UPPC 1

--Return message

FUNC:SOUR:STEP 1:AC:UPPC?
If the UPPER current for ACW test in STEP1 is 1,
1 is returned.

FUNC:SOURce:STEP:AC:LOWC

Sets the LOWER current for ACW test.
Also inquires about the LOWER current for ACW test.
--Syntax:
Command message:
FUNC:SOUR:STEP <sn>:AC:LOWC<current>
Query message:
FUNC:SOUR:STEP <sn>:AC:LOWC?
--Data<sn>:
Data format: integer
Data range:1~16
Data accuracy:1

--Data<current>:
Data format: float
Data range:0~20.000E-3 (0 is OFF)
Data accuracy:1.000E-6
Data unit:mA

--Example:
Set the LOWER current for ACW test in STEP1 as 1mA.
FUNC:SOUR:STEP 1:AC:LOWC 1
--Return message
FUNC:SOUR:STEP 1:AC:LOWC?
If the LOWER current for ACW test in STEP1 is 1,
1.000 is returned.

FUNC:SOURce:STEP:AC:TTIM

Sets the TEST time for ACW test.
Also inquires about the TEST time for ACW test.
--Syntax:
Command message:
FUNC:SOUR:STEP <sn>:AC:TTIM<time>
Query message:
FUNC:SOUR:STEP <sn>:AC:TTIM?
--Data<sn>:
Data format: integer
Data range:1~16
Data accuracy:1

--Data<time>:

Data format: float

Data range:0~999.9 (0 is OFF)

Data accuracy:0.1

Data unit:s

--Example:

Set the TEST time for ACW test in STEP1 as 1s.

FUNC:SOUR:STEP 1:AC:TTIM 1

--Return message

FUNC:SOUR:STEP 1:AC:TTIM?

If the TEST time for ACW test in STEP1 is 1,

1 is returned.

FUNC:SOURce:STEP:AC:RTIM

Sets the RISE time for ACW test.

Also inquires about the RISE time for ACW test.

--Syntax:

Command message:

FUNC:SOUR:STEP <sn>:AC:RTIM<time>

Query message:

FUNC:SOUR:STEP <sn>:AC:RTIM?

--Data<sn>:

Data format: integer

Data range:1~49

Data accuracy:1

--Data<time>:

Data format: float

Data range:0~999.9 (0 is OFF)

Data accuracy:0.1

Data unit:s

--Example:

Set the RISE time for ACW test in STEP1 as 1s.

FUNC:SOUR:STEP 1:AC:RTIM 1

--Return message

FUNC:SOUR:STEP 1:AC:RTIM?

If the RISE time for ACW test in STEP1 is 1,

1.000 is returned.

FUNC:SOURce:STEP:AC:FTIM

Sets the FALL time for ACW test.

Also inquires about the FALL time for ACW test.

--Syntax:

Command message:

FUNC:SOUR:STEP <sn>:AC:FTIM<time>

Query message:

FUNC:SOUR:STEP <sn>:AC:FTIM?

--Data<sn>:

Data format: integer

Data range:1~16

Data accuracy:1

--Data<time>:

Data format: float

Data range:0~999.9 (0 is OFF)

Data accuracy:0.1

Data unit:s

--Example:

Set the FALL time for ACW test in STEP1 as 1s.

FUNC:SOUR:STEP 1:AC:FTIM 1

--Return message

FUNC:SOUR:STEP 1:AC:FTIM?

If the FALL time for ACW test in STEP1 is 1,

1 is returned.

FUNC:SOURce:STEP:AC:ARC

Sets the ARC upper current for ACW test.

Also inquires about the ARC upper current for ACW test.

--Syntax:

Command message:

FUNC:SOUR:STEP <sn>:AC:ARC<current>

Query message:

FUNC:SOUR:STEP <sn>:AC:ARC?

--Data<sn>:

Data format: integer

Data range:1~16

Data accuracy:1

--Data<current>:

Data format: float

Data range:0~20.0E-3 (0 is OFF)

Data accuracy:1.000E-4

Data unit:mA

--Example:

Set the ARC upper current for ACW test in STEP1 as 1mA.
FUNC:SOUR:STEP 1:AC:ARC 1

--Return message

FUNC:SOUR:STEP 1:AC:ARC?
If the ARC upper current for ACW test in STEP1 is 1,
1.000 is returned.

FUNC:SOURce:STEP:AC:FREQ

Sets the test frequency for ACW test.
Also inquires about the ARC upper current for ACW test.

--Syntax:

Command message:
FUNC:SOUR:STEP <sn>:AC:FREQ<frequency>
Query message:
FUNC:SOUR:STEP <sn>:AC:FREQ?

--Data<sn>:

Data format: integer
Data range:1~16
Data accuracy:1

--Data<frequency>:

Data format: character
Data range:50/60
Data accuracy:
Data unit:Hz

--Example:

Set the test frequency for ACW test in STEP1 as 50Hz.
FUNC:SOUR:STEP 1:AC:FREQ:50

--Return message

FUNC:SOUR:STEP 1:AC:FREQ?
If the test frequency for ACW test in STEP1 is 50,
50 is returned.

Commands for DC Setup Function

FUNC:SOURce:STEP:DC:VOLT

Sets the voltage for DCW test.
Also inquires about the voltage for DCW test.

--Syntax:

Command message:
FUNC:SOUR:STEP <sn>:DC:VOLT<voltage>
Query message:
FUNC:SOUR:STEP <sn>:DC:VOLT?

--Data<sn>:

Data format: integer

Data range:1~16

Data accuracy:1

--Data<voltage>:

Data format: float

Data range:50~6000

Data accuracy:1

Data unit:V

--Example:

Set the voltage for DCW test in STEP1 as 1000V.

FUNC:SOUR:STEP 1:DC:VOLT 1000

--Return message

FUNC:SOUR:STEP 1:DC:VOLT?

If the voltage for DCW test in STEP1 is 1000,

1000 is returned.

FUNC:SOURce:STEP:DC:UPPC

Sets the UPPER current for DCW test.

Also inquires about the UPPER current for DCW test.

--Syntax:

Command message:

FUNC:SOUR:STEP <sn>:DC:UPPC<current>

Query message:

FUNC:SOUR:STEP <sn>:DC:UPPC?

--Data<sn>:

Data format: integer

Data range:1~16

Data accuracy:1

--Data<current>:

Data format: float

Data range:1.00E-6~20.000E-3

Data accuracy:1.000E-6

Data unit:mA

--Example:

Set the current for DCW test in STEP1 as 1mA.

FUNC:SOUR:STEP 1:DC:UPPC 0.001

--Return message

FUNC:SOUR:STEP 1:DC:UPPC?

If the UPPER current for DCW test in STEP1 is 0.001,

0.001 is returned.

FUNC:SOURce:STEP:DC:LOWC

Sets the LOWER current for DCW test.

Also inquires about the LOWER current for DCW test.

--Syntax:

Command message:

FUNC:SOUR:STEP <sn>:DC:LOWC<current>

Query message:

FUNC:SOUR:STEP <sn>:DC:LOWC?

--Data<sn>:

Data format: integer

Data range:1~16

Data accuracy:1

--Data<current>:

Data format: float

Data range:0~10.000E-3 (0 is OFF)

Data accuracy:1.000E-6

Data unit:mA

--Example:

Set the LOWER current for DCW test in STEP1 as 1mA.

FUNC:SOUR:STEP 1:DC:LOWC 0.001

--Return message

FUNC:SOUR:STEP 1:DC:LOWC?

If the LOWER current for DCW test in STEP1 is 0.001,

0.001 is returned.

FUNC:SOURce:STEP:DC:TTIM

Sets the TEST time for DCW test.

Also inquires about the TEST time for DCW test.

--Syntax:

Command message:

FUNC:SOUR:STEP <sn>:DC:TTIM<time>

Query message:

FUNC:SOUR:STEP <sn>:DC:TTIM?

--Data<sn>:

Data format: integer

Data range:1~16

Data accuracy:1

--Data<time>:

Data format: float

Data range:0~999.9 (0 is OFF)
Data accuracy:0.1
Data unit:s

--Example:
Set the TEST time for DCW test in STEP1 as 1s.
FUNC:SOUR:STEP 1:DC:TTIM 1
--Return message
FUNC:SOUR:STEP 1:DC:TTIM?
If the TEST time for DCW test in STEP1 is 1,
1 is returned.

FUNC:SOURce:STEP:DC:RTIM

Sets the RISE time for DCW test.
Also inquires about the RISE time for DCW test.
--Syntax:
Command message:
FUNC:SOUR:STEP <sn>:DC:RTIM<time>
Query message:
FUNC:SOUR:STEP <sn>:DC:RTIM?
--Data<sn>:
Data format: integer
Data range:1~16
Data accuracy:1

--Data<time>:
Data format: float
Data range:0~999.9 (0 is OFF)
Data accuracy:0.1
Data unit:s

--Example:
Set the RISE time for DCW test in STEP1 as 1s.
FUNC:SOUR:STEP 1:DC:RTIM 1
--Return message
FUNC:SOUR:STEP 1:DC:RTIM?
If the RISE time for DCW test in STEP1 is 1,
1 is returned.

FUNC:SOURce:STEP:DC:FTIM

Sets the FALL time for DCW test.
Also inquires about the FALL time for DCW test.
--Syntax:
Command message:

FUNC:SOUR:STEP <sn>:DC:FTIM<time>

Query message:

FUNC:SOUR:STEP <sn>:DC:FTIM?

--Data<sn>:

Data format: integer

Data range:1~16

Data accuracy:1

--Data<time>:

Data format: float

Data range:0~999.9 (0 is OFF)

Data accuracy:0.1

Data unit:s

--Example:

Set the FALL time for DCW test in STEP1 as 1s.

FUNC:SOUR:STEP 1:DC:FTIM 1

--Return message

FUNC:SOUR:STEP 1:DC:FTIM?

If the FALL time for DCW test in STEP1 is 1,

1 is returned.

FUNC:SOURce:STEP:DC:ARC

Sets the ARC upper current for DCW test.

Also inquires about the ARC upper current for DCW test.

--Syntax:

Command message:

FUNC:SOUR:STEP <sn>:DC:ARC<current>

Query message:

FUNC:SOUR:STEP <sn>:DC:ARC?

--Data<sn>:

Data format: integer

Data range:1~16

Data accuracy:1

--Data<current>:

Data format: float

Data range:0~20.0E-3 (0 is OFF)

Data accuracy:1.000E-4

Data unit:mA

--Example:

Set the ARC upper current for DCW test in STEP1 as 1mA.

FUNC:SOUR:STEP 1:DC:ARC 0.001

--Return message

FUNC:SOUR:STEP 1:DC:ARC?

If the ARC upper current for DCW test in STEP1 is 0.001,

0.001 is returned.

FUNC:SOURce:STEP:DC:WTIM

Sets the wait time for DCW test.

Also inquires about the wait time for DCW test.

--Syntax:

Command message:

FUNC:SOUR:STEP <sn>:DC:WTIM<time>

Query message:

FUNC:SOUR:STEP <sn>:DC:WTIM?

--Data<sn>:

Data format: integer

Data range:1~16

Data accuracy:1

--Data<time>:

Data format: float

Data range:0~999.9(0 is OFF)

Data accuracy:0.1

Data unit:s

--Example:

Set the wait time for DCW test in STEP1 as 1s.

FUNC:SOUR:STEP 1:DC:WTIM 1

--Return message

FUNC:SOUR:STEP 1:DC:WTIM?

If the wait time for DCW test in STEP1 is 1,

1 is returned.

FUNC:SOURce:STEP:DC:RAMP

Sets the RAMP state for DCW test.

Also inquires about the RAMP state for DCW test.

--Syntax:

Command message:

FUNC:SOUR:STEP <sn>:DC:RAMP<ON/OFF> or <1/0>

Query message:

FUNC:SOUR:STEP <sn>:DC:RAMP?

--Data<sn>:

Data format: integer

Data range:1~16

Data accuracy:1

--Data<voltage>:

Data format: character

Data range:OFF(0), ON(1)

Data accuracy:

Data unit:s

--Example:

Set the RAMP state for DCW test in STEP1 as ON.

FUNC:SOUR:STEP 1:DC:RAMP ON

--Return message

FUNC:SOUR:STEP 1:DC:RAMP?

If the RAMP state for DCW test in STEP1 is ON,

ON is returned.

Commands for IR Setup Function

FUNC:SOURce:STEP:IR:VOLT

Sets the voltage for IR test.

Also inquires about the voltage for IR test.

--Syntax:

Command message:

FUNC:SOUR:STEP <sn>:IR:VOLT<voltage>

Query message:

FUNC:SOUR:STEP <sn>:IR:VOLT?

--Data<sn>:

Data format: integer

Data range:1~16

Data accuracy:1

--Data<voltage>:

Data format: float

Data range:50~1000

Data accuracy:1

Data unit:V

--Example:

Set the voltage for IR test in STEP1 as 1000V.

FUNC:SOUR:STEP 1:IR:VOLT 1000

--Return message

FUNC:SOUR:STEP 1:IR:VOLT?

If the voltage for IR test in STEP1 is 1000,

1000 is returned.

FUNC:SOURce:STEP:IR:UPPR

Sets the UPPER resistance for IR test.

Also inquires about the UPPER resistance for IR test.

--Syntax:

Command message:

FUNC:SOUR:STEP <sn>:IR:UPPR<resistance>

Query message:

FUNC:SOUR:STEP <sn>:IR:UPPR?

--Data<sn>:

Data format: integer

Data range:1~16

Data accuracy:1

--Data< resistance>:

Data format: float

Data range:0~1E10(0 is OFF)

Data accuracy:1.0E5

Data unit:MΩ

--Example:

Set the UPPER resistance for IR test in STEP1 as 1MΩ.

FUNC:SOUR:STEP 1:IR:UPPR 1

--Return message

FUNC:SOUR:STEP 1:IR:UPPR?

If the UPPER current for IR test in STEP1 is 1,

1 is returned.

FUNC:SOURce:STEP:IR:LOWR

Sets the LOWER resistance for IR test.

Also inquires about the LOWER resistance for IR test.

--Syntax:

Command message:

FUNC:SOUR:STEP <sn>:IR:LOWR< resistance >

Query message:

FUNC:SOUR:STEP <sn>:IR:LOWR?

--Data<sn>:

Data format: integer

Data range:1~16

Data accuracy:1

--Data<resistance>:

Data format: float

Data range: 1.0E5~1E10

Data accuracy:1.0E5
Data unit: MΩ

--Example:
Set the LOWER resistance for IR test in STEP1 as 1MΩ.
FUNC:SOUR:STEP 1:IR:LOWR 1
--Return message
FUNC:SOUR:STEP 1:IR:LOWR?
If the LOWER resistance for IR test in STEP1 is 1,
1 is returned.

FUNC:SOURce:STEP:IR:TTIM

Sets the TEST time for IR test.
Also inquires about the TEST time for IR test.
--Syntax:
Command message:
FUNC:SOUR:STEP <sn>:IR:TTIM<time>
Query message:
FUNC:SOUR:STEP <sn>:IR:TTIM?
--Data<sn>:
Data format: integer
Data range:1~16
Data accuracy:1

--Data<time>:
Data format: float
Data range:0~999.9 (0 is OFF)
Data accuracy:0.1
Data unit:s

--Example:
Set the TEST time for IR test in STEP1 as 1s.
FUNC:SOUR:STEP 1:IR:TTIM 1
--Return message
FUNC:SOUR:STEP 1:IR:TTIM?
If the TEST time for IR test in STEP1 is 1,
1 is returned.

FUNC:SOURce:STEP:IR:RTIM

Sets the RISE time for IR test.
Also inquires about the RISE time for IR test.
--Syntax:
Command message:
FUNC:SOUR:STEP <sn>:IR:RTIM<time>

Query message:

FUNC:SOUR:STEP <sn>:IR:RTIM?

--Data<sn>:

Data format: integer

Data range:1~16

Data accuracy:1

--Data<time>:

Data format: float

Data range:0~999.9 (0 is OFF)

Data accuracy:0.1

Data unit:s

--Example:

Set the RISE time for IR test in STEP1 as 1s.

FUNC:SOUR:STEP 1:IR:RTIM 1

--Return message

FUNC:SOUR:STEP 1:IR:RTIM?

If the RISE time for IR test in STEP1 is 1,

1 is returned.

FUNC:SOURce:STEP:IR:FTIM

Sets the FALL time for IR test.

Also inquires about the FALL time for IR test.

--Syntax:

Command message:

FUNC:SOUR:STEP <sn>:IR:FTIM<time>

Query message:

FUNC:SOUR:STEP <sn>:IR:FTIM?

--Data<sn>:

Data format: integer

Data range:1~16

Data accuracy:1

--Data<time>:

Data format: float

Data range:0~999.9 (0 is OFF)

Data accuracy:0.1

Data unit:s

--Example:

Set the FALL time for IR test in STEP1 as 1s.

FUNC:SOUR:STEP 1:IR:FTIM 1

--Return message

FUNC:SOUR:STEP 1:IR:FTIM?
If the FALL time for IR test in STEP1 is 1,
1 is returned.

FUNC:SOURce:STEP:IR:RANG

Sets the range for IR test.
Also inquires about the range for IR test.
--Syntax:
Command message:
FUNC:SOUR:STEP <sn>:IR:RANG<range>
Query message:
FUNC:SOUR:STEP <sn>:IR:RANG?
--Data<sn>:
Data format: integer
Data range:1~16
Data accuracy:1

--Data<range>:
Data format: integer
Data range:0~5 (0 is AUTO, 1 is 10mA, 2 is 2mA, 3 is 200uA, 4 is 20uA, 5 is 2uA)

--Example:
Set the range for IR test in STEP1 as 10mA.
FUNC:SOUR:STEP 1:IR:RANG 1
--Return message
FUNC:SOUR:STEP 1:IR:RANG?
If the range for IR test in STEP1 is 1,
1 is returned.

Commands for OS Setup Function

FUNC:SOURce:STEP:OS:OPEN

Sets the OPEN rate for OS test.
Also inquires about the OPEN rate for OS test.
--Syntax:
Command message:
FUNC:SOUR:STEP <sn>:OS:OPEN<rate>
Query message:
FUNC:SOUR:STEP <sn>:OS:OPEN?
--Data<sn>:
Data format: integer
Data range:1~16
Data accuracy:1

--Data<voltage>:

Data format: integer

Data range:10~100

Data accuracy:1

Data unit:

--Example:

Set the OPEN rate for OS test in STEP1 as 50%.

FUNC:SOUR:STEP 1:OS:OPEN 50

--Return message

FUNC:SOUR:STEP 1:OS:OPEN?

If the OPEN rate for OS test in STEP1 is 50,

50.00 is returned.

FUNC:SOURce:STEP:OS:SHOT

Sets the SHOT rate for OS test.

Also inquires about the SHOT rate for OS test.

--Syntax:

Command message:

FUNC:SOUR:STEP <sn>:OS:SHOT<rate>

Query message:

FUNC:SOUR:STEP <sn>:OS:SHOT?

--Data<sn>:

Data format: integer

Data range:1~16

Data accuracy:1

--Data< rate>:

Data format: float

Data range:0~500

Data accuracy:10

Data unit:

--Example:

Set the SHOT rate for OS test in STEP1 as 100%.

FUNC:SOUR:STEP 1:OS:SHOT 100

--Return message

FUNC:SOUR:STEP 1:OS:SHOT?

If the SHOT rate for OS test in STEP1 is 100.0,

100.0 is returned.

FUNC:SOURce:STEP:OS:GET

Outputs the capacitance.

--Syntax:

Command message:

FUNC:SOUR:STEP <sn>:OS: GET

The instrument will automatically sample the standard capacitance value after impedance transformation of the current.

Commands for PROG Function

FUNC:SOURce:STEP INS

Add a new test item in existing test programme(STEP).

FUNC:SOURce:STEP DEL

Delete the current test item in existing test programme(STEP).

FUNC:SOURce:STEP NEW

Create an empty test programme to write a brand new test programme.

4.7.4 FETCh Subsystem Commands

The FETCh Subsystem commands are used to get the measurement result and mode setup.

Command Tree:

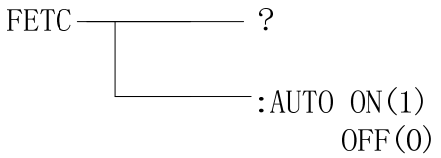

FETCH? outputs the measurement results of the instrument.

Command syntax: FETCH?

Instruction: the instrument will return each measurement result (measurement result of each step).

FETCh: AUTO command makes the instrument to send each measurement result to its output buffer automatically.

Command syntax: FETCh:AUTO ON(1)
OFF(0)

For example: WrtCmd("FETC:AUTO ON"); set the automatic sending mode as ON.

4.7.5 SYSTem Subsystem Commands

Command Tree:

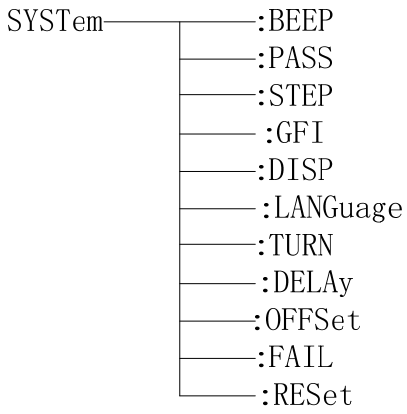

SYSTem:PASS

Sets the time for PASSHOLD.

Also inquires about the time for PASSHOLD.

--Syntax:

Command message:

SYST:PASS <time>

Query message:

SYST:PASS?

--Data< rate>:

Data format: float

Data range:0.3~99.9

Data accuracy:0.1

Data unit:s

--Example:

Set the PASSHOLD as 1.0s.

FUNC: :SYST:PASS 1

--Return message

FUNC: :SYST:PASS?

If the time for PASSHOLD is 1.000,

1.000 is returned.

SYSTem:STEP

Sets the time for STEPHOLD.

Also inquires about the time for STEPHOLD.

--Syntax:

Command message:

SYST:STEP<time>

Query message:

SYST:STEP?

--Data< rate>:

Data format: float

Data range:0.3~99.9

Data accuracy:0.1

Data unit:s

--Example:

Set the STEPHOLD as 1.0s.

FUNC: :SYST:STEP1

--Return message

FUNC: :SYST:PASS?

If the time for STEPHOLD is 1.000,

1.000 is returned.

SYSTem:GFI

Sets the state for GFI.

Also inquires about the state for GFI.

--Syntax:

Command message:

SYST:GFI <ON/OFF> or <1/0>

Query message:

SYST:GFI?

--Data< ON/OFF>:

Data format: character

Data range:0(OFF), 1(ON)

--Example:

Set the GR CONT as ON,

SYST:GFI ON or SYST:GFI:1

--Return message

FUNC: :SYST:GFI?

If the state for GR CONT is 1,

1 is returned.

SYSTem:FAIL

Sets the state for AFTR FAIL.

Also inquires about the state for AFTR FAIL.

--Syntax:

Command message:

SYST:FAIL <0/1/2/3>

Query message:

SYST:FAIL?

--Data< STOP/CONT/REST/NEXT>:

Data format: character

Data range:0~3

--Example:

Set the AFTR FAIL as ON,

SYST:FAIL 0

--Return message

:SYST: FAIL?

If the state for AFTR FAIL is 0,

0 is returned.

SYSTem:LANGuage

Sets the state for language.

Also inquires about the state for language.

--Syntax:

Command message:

SYST:LANG<0/1>

Query message:

SYST:LANG?

--Data< ON/OFF>:

Data format: character

Data range:0(Chinese), 1(English)

--Example:

Set the LANG as 0(Chinese),

SYST:LANG 0

--Return message

:SYST: LANG?

If the state for LANG is 0,

0 is returned.

SYSTem:BEEP

Sets the BEEP.

Also inquires about the BEEP.

--Syntax:

Command message:

SYST:BEEP <volume>

Query message:

SYST:BEEP?

--Data< OFF/SHORT/LONG>:

Data format: character

Data range:0~2(0 is OFF, 1 is SHORT, 2 is LONG)

--Example:

Set the BEEP as 1,

SYST:BEEP 1

--Return message

:SYST: BEEP?

If the volume of BEEP is 1,

1 is returned.

SYSTem:DISP

Sets the state for DISP.

Also inquires about the state for DISP.

--Syntax:

Command message:

SYST:DISP<0/1>

Query message:

SYST:DISP?

--Data< 0/1>:

Data format: character

Data range:0(P/F), 1(DATA)

--Example:

Set the DISP as DATA,

SYST:DATA 1

--Return message

:SYST: DISP?

If the state for DISP is 1,

1 is returned.

SYSTem:DELAy

Sets the time for DELAy.

Also inquires about the time for DELAy.

--Syntax:

Command message:

SYST:DELA <time>

Query message:

SYST:DELA?

--Data:

Data format: float

Data range:0~99.9(0 is OFF)
Data accuracy:0.1
Data unit:s

--Example:
Set the DELA as 1.0s,
SYST:DELA 1
--Return message
:SYST: DELA?
If the time for DELA is 1.000,
1.000 is returned.

SYSTem:OFFSet

Sets the state for OFFSet.
Also inquires about the state for OFFSet.
--Syntax:
Command message:
SYST:OFFS<ON/OFF/GET> or <1/0/GET>
Query message:
SYST:OFFS?

--Data< ON/OFF/GET>:
Data format: character
Data range:0(OFF), 1(ON), GET(get the reset value)

--Example:
Set the OFFS as ON,
SYST:OFFS ON or :SYST: OFFS 1
--Return message
:SYST: OFFS?
If the state for OFFS is 1,
1 is returned.
--Gets the current value
SYST: OFFS GET

SYSTem:TURN

Sets the state for TURN.
Also inquires about the state for TURN.
--Syntax:
Command message:
SYST:TURN<ON/OFF> or <1/0>
Query message:
SYST:TURN?

--Data< ON/OFF>:

Data format: character

Data range:0(OFF), 1(ON)

--Example:

Set the TURN as ON,

SYST:TURN ON or :SYST: GFI: 1

--Return message

:SYST: TURN?

If the state for GR TURN is 1,

1 is returned.

SYSTem:RESet

Sets all sets to default state.

--Syntax:

Command message:

SYST:RES

4.7.6 Other Commands

***IDN**

Inquires about the model and version information of the instrument.

Return message:

Where,

<manufacturer> Gets the manufacturer name (Tonghui)

<model> Gets the machine model (such as TH9320/9310)

<firmware> Gets the version number of firmware (such as Version1.0.0)

For example: WrtCmd("*IDN?");

Chapter 5 Appendix

5.1 Model and Specification of TH9320 series/TH9310 series

Model			TH9320 series	TH9310 series
Withstanding voltage test				
Output voltage	**AC**	**Range**	0.050kV—5.000kV	
		Waveform	Sinusoidal wave	
		Distortion	< 3%	
		Frequency	50, 60Hzselectable	
		Frequency accuracy	±2%	
		Output power	100VA（5.000kV 20mA）	50VA（5.000kV 10mA）
		Voltage regulation	±（1.0% +50V)	
	DC	**Range**	0.050 kV—6.00kV (rated power)	
		Signal source frequency	600Hz	
		Output power	50VA（5.000kV 10mA）	25VA（5.000kV 5mA）
		Voltage regulation	±（1.0% +100V)(rated power)	
	Voltage resolution		1V	
	Voltage display accuracy		±(1.0%reading+5V) (non-load)	
	Voltage generating method		DDS signal source +AB power amplifier	
Current test range	**AC**	**Range**	0.001mA – 20.00 mA	0.001mA – 10mA
		Range	>40 mA (set output voltage>500V)	>20 mA (set output voltage>500V)
		Short-circuit current	0.001 mA	0.001 mA
		Resolution	±(1% reading +5digits)	±(1% reading +5digits)
		Accuracy	OFF-0.001 mA-20 mA	OFF-0.001 mA-10mA
	DC	**Range**	0.1uA – 10.00mA	0.1uA – 5.00mA
		Accuracy	±(1.0%reading+5digits)	±(1.0%reading+5digits)
	Discharge function		Auto discharge after test ends(DCW)	Auto discharge after test ends (DCW)

IR test			
Output voltage	0.050V – 1.000V		
Voltage resolution	1V		
Voltage test accuracy	±(1.0%reading+2V)		
Max. output current	10mA	5mA	
Max. output power	10VA（1000V/10mA）	5VA（1000V/5mA）	
Output short current	>20mA (set output voltage>500V)	>10mA (set output voltage>500V)	
Load regulation	≤1%(rated power)		
Ripple（1kV）	≤3% (1kV, non-load)		
Discharge function	Auto discharge after test ends		
Resistance measurement range	0.01MΩ– 10GΩ	0.02MΩ– 10GΩ	
Resistance display range (1000V)	10 mA 0.1 MΩ-0.5 MΩ 2mA 0.5 MΩ-5 MΩ 200uA 5 MΩ-50 MΩ 20uA 50 MΩ-500MΩ 2uA 500 MΩ-10GΩ	5mA 0.2 MΩ-1 MΩ 1mA 1 MΩ-10 MΩ 100uA 10 MΩ-100 MΩ 10uA 100 MΩ-1GΩ 1uA 1GΩ-10GΩ	
Resistance measurement accuracy	≥500V 1MΩ– 1GΩ ±(5% reading +5 digits) 1GΩ– 10GΩ±(10% reading +5 digits) < 500V 0.1MΩ– 1GΩ±(10%reading +5 digits) 1GΩ– 10GΩ(for reference only, no accuracy requirement)		
Current measurement accuracy	±(1.5%reading+5digits) (after correction)		
Arc detection			
Measurement Range	**AC**	1mA – 20mA	
	DC	1mA – 20mA	
Comparator			
Judgement mode	Window comparison mode I_{lower} ON: at $I_{lower} < Ix < I_{upper}$, PASS; at $I_x \le I_{lower}$ or $I_x \ge I_{upper}$, FAIL (condition: $I_{lower} < I_{upper}$) I_{lower} OFF: at $Ix < I_{upper}$, PASS; at $I_x \ge I_{upper}$, FAIL The same judgment mode for insulation resistance judgment.		
Current upper limitI_{uppper}	AC	0.001mA – 20mA	0.001mA – 10mA
	DC	0.1uA – 10mA	0.1uA – 5mA
Current lower limitI_{lower} (LOWER OFF)	AC	0.001mA – 20mA	0.001mA – 10mA
	DC	0.1uA – 10mA	0.1uA –5mA
Resistance upper limit		OFF - 0.01MΩ - 10GΩ	OFF - 0.01MΩ - 10GΩ

Resistance lower limit	0.01MΩ– 10GΩ	0.01MΩ– 10GΩ
Judging output	PASS/FAIL LCD or LED respectively display, sound alarm	PASS/FAIL LCD or LED respectively display, sound alarm
Parameter setup		
Voltage rising time	0.1s – 999.9s	
Voltage down time	0 s – 999.9s, only after the withstanding voltage test passes	
Voltage waiting time	0.3s – 999.9s(only for DC withstanding voltage and rising time+ test time＞waiting time)	
Test time setup	0.3s – 999.9s(when TIMER is ON)	
Time accuracy	±(0.2% set value ± 0.1s)	
Measurement function		
Keyboard lock	Prevent the test conditions being modified unintentionally.	
Base clear function	Clear the current flowing through the IR or distributed capacitor between the output cables.	
Start-up waiting display	After the test starts (press START), high-voltage enabling signals will be output. Waiting for a while, high-voltage begins to be output.	
Current over-range judging	The hardware will rapidly judge the insulation breakdown. It is more convenient and safer than voltage sampling and can reduce shocks to products.	
ARC detection	Sample abrupt signals of current and then judge the potential danger and the rough scale of the return circuit.	
Ground wire current detection	Protect personal safety at the moment of accidental electric shock or leakage.	
Alarm volume adjustment	OFF, HIGH, LOW	
High-voltage indicator	Window indicator or LED indicator	
Storage and interface		
File program and storage	20 programmable test files, 16 test steps respectively set for AC, DC and IR in each file.	
USB interface	Available	Available
Start-up parameters storage	Parameter settings automatically saved, and automatically loaded next time of turning on the tester.	
Control interface	HANDLER, SINGAL	
Communication interface	RS232C, USB	

Correspondence table of Model and Function

	ACW	DCW	IR	OS
TH9320	*	*	*	*
TH9320A	*	*		*
TH9320B	*			*
TH9310	*	*	*	*
TH9310A	*	*		*

TH9310B	*			*

General Specifications

General specifications		
Working temperature & humidity		0°C－40°C, ≤80%RH
Power supply		100V-121V, 198V-242V 47.5-63Hz
Power consumption	TH9320/A/B	≤400VA
	TH9310/A/B	≤ 300VA
Dimensions		340mm×120mm×450mm
Weight	TH9320/A/B	Approx. 15kg
	TH9310/A/B	Approx. 13kg

Included accessories:

TH90003R	Withstanding voltage test clip	1
TH90003B	Withstanding voltage grounding clip	1