OPERATION MANUAL

TH2829 Series

Precision LCR Meter

Changzhou Tonghui Electronic Co. , Ltd.

Add: No.3, Tianshan Road, New District, Changzhou, Jiangsu

Tel:（0519）85195566，85132222

Fax:（0519）85109972

E-mail: Sales@tonghui.com.cn

Website: http:// www.tonghui.com.cn

Contents

Chapter 1 Out of Box Audit 1
1.1 To Inspect the package 1
1.2 Power connection 1
1.3 Fuse 1
1.4 Environment 2
1.5 Use of Test Fixture 2
1.6 Warm-up 2
1.7 Other features 3
Chapter 2 Introduction 4
2.1 Introduction to front panel 4
2.2 Introduction to rear panel 6
2.3 Introduction to display zone 7
2.4 Main menu keys and corresponding displayed pages 8
2.4.1 [DISP] 8
2.4.2 [SETUP] 8
2.4.3 [SYSTEM] 8
2.5 Basic Operation 9
2.6 Start the instrument 9
Chapter 3 Introduction to [DISP] 11
3.1 <MEAS DISPLAY> 11
3.1.1 Test function 12
3.1.2 Test range 14
3.1.3 Test frequency 14
3.1.4 Test level 15
3.1.5 DC bias 16
3.1.6 Test speed 16
3.1.7 Tools 17
3.1.8 Save LCR test result by U disk 18
3.2 <BIN NO. DISP> 18
3.2.1 Comparator function 19
3.3 <BIN COUNT DISP> 20
3.3.1 PARAM 21
3.3.2 NOM. 21
3.3.3 BIN 21
3.3.4 HIGH/LOW 21
3.3.5 COUNT 21
3.3.6 AUX 21
3.3.7 OUT 21
3.4 <LIST SWEEP DISP> 22
3.4.1 Sweep mode 23
3.4.2 FREQ (Hz) 23

3.4.3 Cp[F] D[ ] 23
3.4.4 CMP (Compare) 23
3.5 <TRACE SWEEP>page 24
3.5.1 FORMAT 24
3.5.2 SCALE 25
3.5.3 READ 25
3.5.4 TRACE 25
3.5.5 POINTS 25
3.5.6 TRIGGER 25
3.6 <MEASURE SETUP> 26
3.6.1 Trigger mode 28
3.6.2 Auto level control function 28
3.6.3 Bias current isolation function 29
3.6.4 Average 30
3.6.5 Level monitor function 30
3.6.6 Delay time 31
3.6.7 Output impedance 31
3.6.8 Deviation test function 31
3.7 <CORRECTION> 33
3.7.1 OPEN 34
3.7.2 SHORT 35
3.7.3 LOAD 36
3.7.4 Load correction test function 38
3.7.5 Cable length selection 38
3.7.6 Single/ multi correction mode 38
3.8 <LIMIT TABLE> 39
3.8.1 Swap parameter 39
3.8.2 Limit modes of compare function 40
3.8.3 Set nominal value of tolerance mode 41
3.8.4 Comparator function ON/OFF 41
3.8.5 Auxiliary bin ON/OFF 42
3.8.6 HIGH/LOW 42
3.9 <LIST SWEEP SETUP> 43
3.9.1 MODE 44
3.9.2 Test parameter 44
3.9.3 Sweep parameter setup 45
3.10 <TRACE SWEEP SETUP> 45
3.10.1 MODE 46
3.10.2 START 46
3.10.3 END 47
3.10.4 Coordination range setting 47
Chapter 4 [SYSTEM] and <FILE MANAGE> 48
4.1 <SYSTEM SETUP> 48
4.1.1 MAIN FUNC 48

4.1.2 ON BEEPERS....48
4.1.3 PASS BEEP....49
4.1.4 FAIL BEEP....49
4.1.5 LANGUAGE....50
4.1.6 PASS WORD....50
4.1.7 BUS MODE (Reserved function)....51
4.1.8 GPIB ADDR (Reserved function)....51
4.1.9 TALK ONLY....51
4.1.10 BIAS SRC....51
4.1.11 BAUD RATE....52
4.1.12 DATA/TIME....52
4.2 LCR <FILE MANAGE>....53
4.2.1 Setup file for single-group component (*.STA)....53
4.2.2 U-disk manage performance....54
4.2.3 Operation steps for file management....54
Chapter 5 Execute LCR operation and some examples....57
5.1 Correction operation....57
5.1.1 Sweep correction....57
5.1.2 Point-frequency correction....58
5.2 Correct connection of DUT....58
5.3 Eliminate the influence of stray impedance....59
5.4 Operation example for testing inductance with TH2829A....60
5.5 Operation example of testing capacitance by multi-frequency list sweep....62
5.6 Operation example of load correction....65
Chapter 6 Performance and Test....67
6.1 Test function....67
6.1.1 Parameter and symbol....67
6.1.2 Mathematical operation....67
6.1.3 Equivalent mode....67
6.1.4 Range....67
6.1.5 Trigger....67
6.1.6 Delay time....68
6.1.7 Connection modes of test terminals....68
6.1.8 Test speed (Frequency>=10kHz)....68
6.1.9 Average....68
6.1.10 Display digit....68
6.2 Test signal....68
6.2.1 Test signal frequency....68
6.2.2 Signal mode....69
6.2.3 Test signal level....69
6.2.4 Output impedance....69
6.2.5 Monitor for test signal level....69
6.2.6 Maximum measurement display range....69

6.2.7 DC bias voltage source 70
6.3 Measurement accuracy 70
6.3.1 Accuracies of |Z|, |Y|, L, C, R, X, G, B 70
6.3.2 Accuracy of D 70
6.3.3 Accuracy of Q 71
6.3.4 Accuracy of θ 71
6.3.5 Accuracy of G 71
6.3.6 Accuracy of Rp 71
6.3.7 The accuracy of Rs 72
6.3.8 Accuracy factor 72
6.3.9 Accuracy of DCR 75
6.3.10 Accuracy of leakage inductance Lk 75
6.4 Safety requirement 75
6.4.1 Insulation resistance 76
6.4.2 Insulation intensity 76
6.4.3 Leakage current 76
6.5 Electromagnetic compatibility 76
6.6 Performance test 76
6.6.1 Working condition 76
6.6.2 The used instruments and devices 76
6.6.3 Function check 77
6.6.4 Test signal level 77
6.6.5 Frequency 77
6.6.6 Measurement accuracy 78
6.6.7 Accuracy of C and D 78
6.6.8 Accuracy of L 78
6.6.9 Accuracy of Z 78
6.6.10 Accuracy of DCR 79
Chapter 7 Command Reference 80
7.1 Subsystem commands for TH2829 80
7.1.1 DISPlay subsystem commands 80
7.1.2 FREQuency subsystem commands 82
7.1.3 VOLTage subsystem commands 83
7.1.4 CURRent subsystem commands 83
7.1.5 AMPLitude subsystem commands 84
7.1.6 Output RESister subsystem commands 84
7.1.7 OUTPut subsystem commands 84
7.1.8 BIAS subsystem commands 86
7.1.9 FUNCtion subsystem commands 87
7.1.10 LIST subsystem commands 91
7.1.11 APERture subsystem commands 94
7.1.12 TRIGger subsystem commands 95
7.1.13 FETCh? subsystem commands 96
7.1.14 CORRection subsystem commands 98

7.1.15 COMParator subsystem commands 104
7.1.16 Mass MEMory subsystem commands.....109
7.2 GPIB Common Commands 110

Announcement

The description of the manual may not cover all contents of the instrument, and our company is subject to change and to improve the performance, function, inner structure, appearance, accessory and package of the instrument without notice. If there is puzzle caused by inconsistency of manual and instrument, then you can contact with our company by the address on the cover.

Chapter 1 Out of Box Audit

When you receive the instrument, some inspections are necessary, and the condition must be understood and available before installing the instrument.

1.1 To Inspect the package

Inspect the shipping container for damage after unpacking it. It is not recommended to power on the instrument in the case of a damaged container.
If the contents in the container do not conform to the packing list, notify us or your dealer.

1.2 Power connection

1) Power-supplying voltage range: 100~120Vac or 198~242Vac. Being related with the power setup on the rear panel.
2) Power-supplying frequency range: 47~63Hz.
3) Power-supplying power range: less than 80VA.
4) Power supplying input phase line L, zero line N, ground lead E should be as same as the power plug of the instrument.
5) After careful design, the instrument can reduce the clutter jamming caused by AC power terminal input, however, it should be used under the environment with low-noise. Please install power filter if being unavoidable.

————————————————————————————————————

Warning: In order to prevent user and instrument from being hurt by leakage, it is necessary for user to guarantee the ground line of supply power being reliably grounded.

————————————————————————————————————

1.3 Fuse

The instrument has installed fuse, so operators should use the installed fuse of our company.

————————————————————————————————————

Warning: Be sure that the location of fuse is consistent with power-supplying voltage range before charging.

————————————————————————————————————

1.4 Environment

1) Please do not operate the instrument in the place that is vibrative, dusty, under direct sunlight or where there is corrosive air.
2) The normal working temperature is 0℃～40℃, relative humidity ≤75%, so the instrument should be used under above condition to guarantee the accuracy.
3) There is heat abstractor on the rear panel to avoid the inner temperature rising. In order to keep good airiness, please don't obstruct the left and right airiness holes to make the instrument maintain the accuracy.
4) Although the instrument has been specially designed for reducing the noise caused by ac power, a place with low noise is still recommended. If this cannot be arranged, please make sure to use power filter for the instrument.
5) Please store the instrument in the place where temperature is between 5℃ and 40℃, humidity is less than 85%RH. If the instrument will not be put in use for a time, please have it properly packed with its original box or a similar box for storing.
6) The instrument, especially the test cable should be far from strong electro-magnetic field, to avoid the jamming on measurement.

1.5 Use of Test Fixture

Please use the accessory test fixture or cable, **the test fixture made by user or from other company may cause the incorrect measurement result**. The test fixture or cable should be kept clean, as well as the pin of DUT, thus to guarantee the good connection between DUT and fixture.

Connect the fixture or cable to four test terminals Hcur, Hpot, Lcur, Lpot on the front panel. As for the DUT with shielding shell, connect shielding layer or ground "⊥".

Note: When test fixture or cable has not being installed, the instrument will display an unstable test result.

1.6 Warm-up

1) To guarantee the accurate measurement, the warm-up time is no less than 15min.
2) Please not turn on or off instrument frequently, in order to avoid the inner data fluster.

1.7 Other features

1) Power: consumption power≤80VA.
2) Dimension (W*H*D): 430mm*185mm*473mm
3) Weight: About 13kg.

Chapter 2 Introduction

In this chapter, the basic operation features of TH2829 series are described. Please read the content carefully before using TH2829 series instruments, thus you can learn the operation of TH2829.

TH2829 series instrument includes TH2829A, TH2829B and TH2829C. There frequency ranges are respectively 20Hz-300KHz, 20Hz-500KHz and 20Hz-1MHz. This manual takes TH2829A for example to describe the basic operation of Th2829 series.

2.1 Introduction to front panel

Figure 2-1 shows the front panel of TH2829.

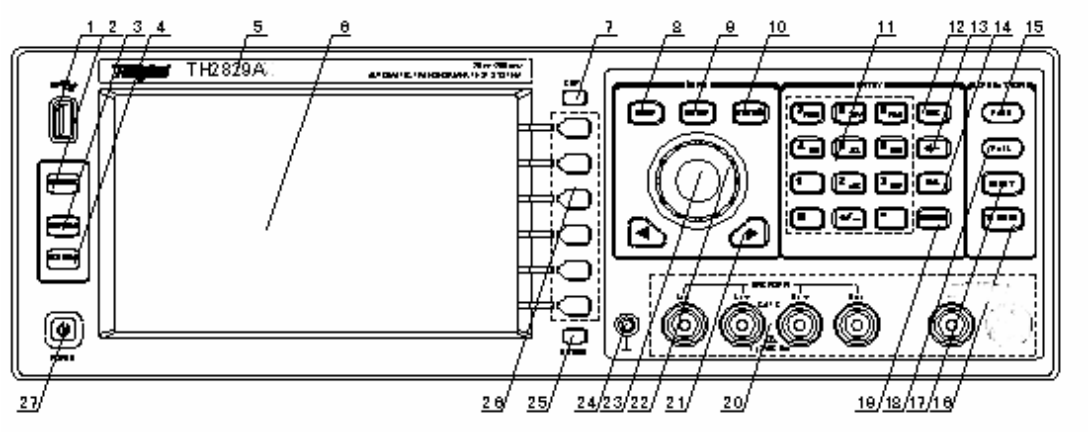

1) USB HOST interface
   Connect U flash disk so as to save or use a specified file.
2) [KEYLOCK]
   Press [KEYLOCK], it will be lighted, which means the function of current panel is locked. Press it again, it will be off, which means discharging the lock status. If the password function is ON, it means correct password is necessary when discharging the key-lock, or the key cannot be unlocked.
3) [DC BIAS]
   [DC BIAS] is used to permit or forbid the output of 0-100mA/10V DC bias source. Press this key, it will be lighted which means DC bias output is permitted. Press this key once more, it will be off which means DC bias output is prohibited. The key is useless in some pages where the DC BIAS cannot be added.
4) [DC SOURCE]
   This key is used to permit or forbid the output of a 10V individual voltage source.
5) Brand and model
   Brand and model

6) LCD
   800*480 colorful TFT LCD displays measurement results and conditions.
7) [COPY]
   Copy the currently displayed page to USB memory.
8) [DISP]
   Press this key to enter into the corresponding measurement display page of instrument functions.
9) [SETUP]
   Press this key to enter into the corresponding measurement setup page of instrument functions.
10) [SYSTEM]
    Press this key to enter into the system setup page.
11) Numerical keys
    These keys are used to input data to the instrument. The key consists of numerical keys [0] to [9], decimal point [.] and [+/-] key.
12) [ESC]
    ESCAPE key
13) [←]
    BACKSPACE key is used delete the last numeric of the input value.
14) [CAL]
    Execute the calibration operation. Press this key to execute OPEN/SHORT calibration.
15) PASS indicator
    LED indicator shows the test result has passed.
16) [TRIGGER]
    When the trigger mode is set to MAN mode, press this key to trigger the instrument.
17) [RESET]
    Press this key, other operation cannot be executed on other pages.
18) FAIL indicator
    LED indicator shows the test result has failed.
19) [ENTER]
    This key is used to end the input of data, and confirm and save the data displayed on the inputting line (the bottom line on LCD).
20) Test terminals (UNKNOWN)
    4-teminal test pair is used to connect 4-terminal test fixture or cable to measure DUT.
    The 4 terminals are respectively as follows: Hcur, Hpot, Lpot and Lcur.

    DCI BIAS terminal

21) CURSOR
    This key is used to move the cursor on the LCD displayed page. When the cursor moves to a zone, the corresponding zone will be lightened.

22) Knob for menu selection and numeric input
This knob is used to move the cursor, select and set parameters.
23) Confirmation key
This key is used to end the data input, confirm and save the data input through knob.
24) Ground terminal
The ground terminal is connected with the case of instrument, which can be used to protect or shield the ground connection.
25) File
Press this key to enter into the file manage system.
26) Soft keys
Six soft keys are used to select parameters. The corresponding function of each soft key has been displayed on its left (the right part of LCD). The function definition varies with different pages.
27) POWER
Power switch

2.2 Introduction to rear panel

Figure 2-2 shows the rear panel of TH2829.

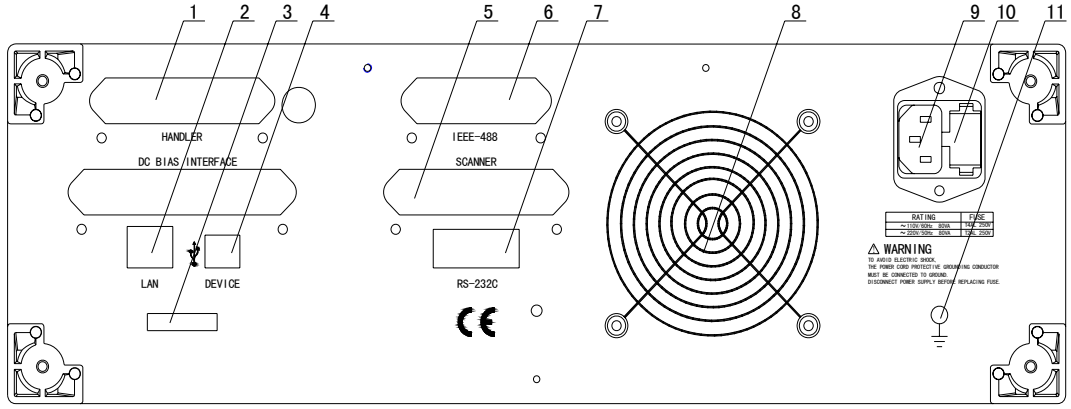

Figure 2-2 Rear panel

1) HANDLER interface
Handler interface is used to realize the sorting output of test results.
2) LAN interface
LAN interface is used to realize the control and the communication of network system.
3) Nameplate
Information about production date, instrument number and manufacturer etc..
4) USB DEVICE interface
The tester can communicate with PC through the USB DEVICE interface.
5) SCANNER interface

6) IEEE-488 interface
   The tester can communicate with PC through GPIB interface.
7) RS232 interface
   Series communication interface can realize the communication with PC.
8) Fan window
   Heat elimination, maintaining the normal working temperature
9) Power socket
   Input AC power.
10) Fuse base
   Being used to install power fuse, protect instrument, and switch 110V/220V by changing the direction of core.

——

Warning: Be sure that the direction of fuse is accordant with power-supply voltage range before charging.

——

11) Ground terminal
   The ground terminal is connected with instrument casing, being available for protecting or shielding ground connection.

2.3 Introduction to display zone

TH2829 applies a 65k, 7-inch TFT display. The display screen is divided into the following zones:

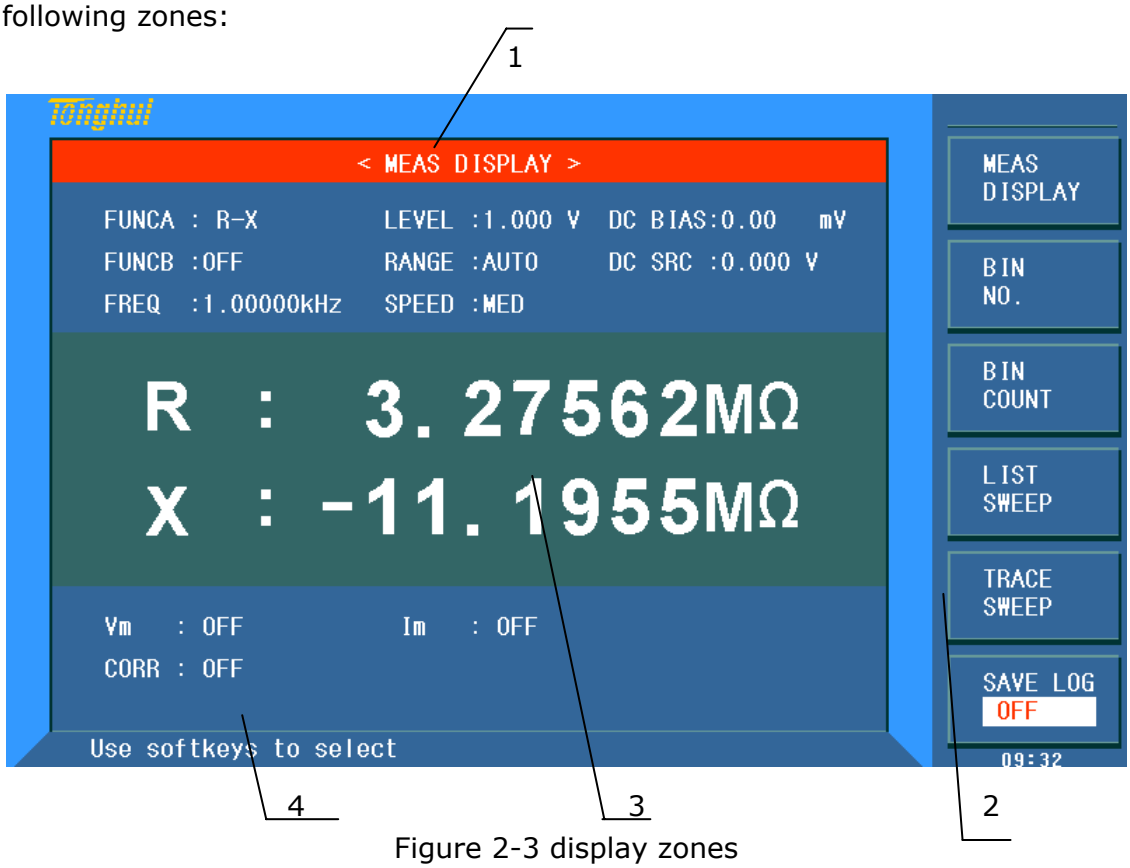

Figure 2-3 display zones

1) Display page name
   Indicate the name of the currently displayed page.
2) Soft keys
   The zone is used to display the function definition of soft key. The definition of soft key can be different as the difference of cursor's direction in the zone.
3) Test result/ condition display zone
   In this zone, test result information and current condition are displayed.
4) Help
   In this zone, information about system and user data input is displayed.

2.4 Main menu keys and corresponding displayed pages

2.4.1 [DISP]

When the LCR function is active, press this key-**[DISP]** to enter into the LCR measurement display page, the following soft keys will be displayed in the soft key zone.

<MEAS DISPLAY>
<BIN NO.>
<BIN COUNT>
<LIST SWEEP DISP>
<TRACE SWEEP DISP>
<SAVE LOG>

2.4.2 [SETUP]

When the LCR function is active, press this key**-[SETUP]**, the following soft keys will be displayed in the soft key zone on the LCR measurement setup page.

<MEAS SETUP>
<CORRECTION>
<LIMIT TABLE>
<LIST SWEEP SETUP>
<TRACE SWEEP SETUP>
<TOOL>

2.4.3 [SYSTEM]

This key**-[SYSTEM]** is used to enter into the system setup page. The following soft keys will be available:

<SYSTEM SETUP>
<LAN SETUP>

2.5 Basic Operation

Basic operation of TH2829 is as follows:

- Use menu keys ([DISP], SETUP], [SYSTEM]) and soft keys to select the desired page.
- Use cursor keys ([←][→]) and the slide switch to move the cursor to the desired zone. When the cursor moves to a specified zone, the zone will become reverse expression.
- The soft key functions corresponding to the current zone of the cursor will be displayed in the soft key zone. Users can select and use the desired key. Numeric keys, [BACKSPACE] and [ENTER] are used to input data.
  When a numeric key is pressed down, the usable unit soft key will be displayed in the soft key zone. You can choose a unit soft key or press [ENTER] to end data inputting. When [ENTER] is used to terminate data inputting, the unit of data will be set to a default unit, such as Hz, V or A. For example, the default unit for frequency is Hz.

2.6 Start the instrument

Plug in 3-line power plug.
Caution: Keep the power-supply voltage and frequency conform to above specifications. Power input phase line L, zero line N, ground line E should be the same as that of the instrument.
Press the power switch at the left corner on the front panel and then a boot screen will appear which displays our company logo, instrument model (TH2829A), and the version number of the software (Ver1.0.0).

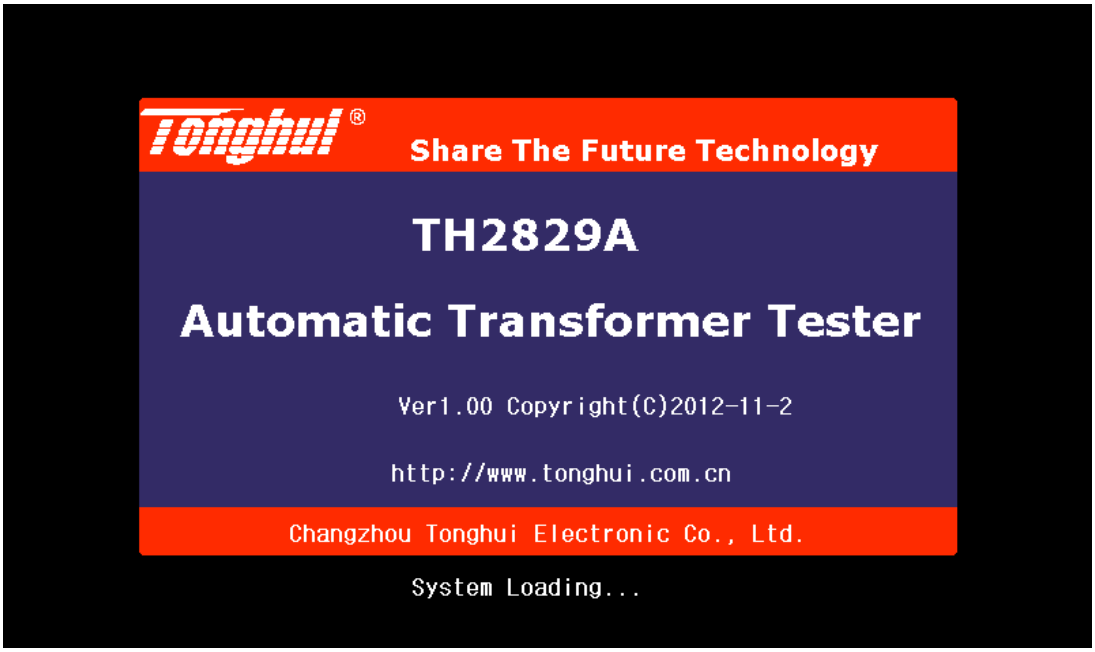

If the password protection function is on, users are required to input the password and then press [ENTER] to enter into the page of main menu.

————————————————————————————————————

Note: The instrument has a **default password-2829**. In your practical use, you can change it and set your own one. Please see <SYSTEM> section for more information.

Chapter 3 Introduction to [DISP]

3.1 <MEAS DISPLAY>

When the LCR function is applied, press [DISP], the <MEAS DISPLAY> page will be displayed on screen as shown in the following figure.



TH2829-301

On this page, the test result is displayed in upper-case character. The measurement control parameters can be set in this page:

- Test function (FUNCA)
- Test function (FUNCB)
- Test frequency (FREQ)
- Test level (LEVEL)
- Test range (RANGE)
- Test speed (SPEED)
- DC bias
- DC voltage source (DC SRC)

There are 8 zones in this page: FUNCA, FUNCB, FREQ, LEVEL, RANG, SPEED, DC BIAS, DC SRC. The details will be discussed later.

The test result/ condition display zone shows the information about test condition. These conditions can be set on <Measure> page or <Correction> page.

- Signal source voltage/ current monitor (**Vm, Im**)
- Open, short, load correction ON/OFF status (**CORR**)

3.1.1 Test function

In a measurement period, TH2829 can test four parameters for an impedance component: two primary parameters and two secondary parameters. Parameters that can be tested are as follows:

Primary parameters

- |Z| (Module of impedance)
- |Y| (Module of admittance)
- L (Inductance)
- C (Capacitance)
- R (Resistance)
- G (Conductance)
- DCR (DC resistance)

Secondary Parameters

- D (Dissipation factor)
- Q (Quality factor)
- Rs (Equivalent Series Resistance ESR)
- Rp (Equivalent Parallel Resistance)
- X (Reactance)
- B (Admittance)
- θ (Phase Angle)

Test results of primary and secondary parameters are respectively displayed in two lines in the form of upper-case characters. The primary parameter displays in the upper line while the secondary parameter displays in the lower line.

Operation steps for setting test function:

1) Move the cursor to FUNCA zone, the following soft keys will be displayed on the screen.
   - Cp—…→
   - Cs—…→
   - Lp—…→
   - Ls—…→
   - Z—…→
   - ↓
2) Press the soft key corresponding to Cp—…→, the following parameters will be shown for your choice.
   - Cp-D
   - Cp-Q
   - Cp-G
   - Cp-Rp
   - ←

Press the soft key corresponding to your desired parameter. Then press ← to return to upper soft key menu.

3) Press Cs—…→, the following parameters will be shown for your choice.
   - Cs-D

- Cs-Q
- Cs-Rs
- ←

Press the soft key corresponding to your desired parameter. Then press ← to return to upper soft key menu.

4) Press Lp—…→, the following parameters will be shown for your choice.
   - Lp-D
   - Lp-Q
   - Lp-G
   - Lp-Rp
   - ←

Press the soft key corresponding to your desired parameter. Then press ← to return to upper soft key menu.

5) Press Ls—…→, the following parameters will be shown for your choice.
   - Ls-D
   - Ls-Q
   - Ls-Rs
   - ←

Press the soft key corresponding to your desired parameter. Then press ← to return to upper soft key menu.

6) Press Z—…→, the following parameters will be shown for your choice.
   - Z-d
   - Z-r
   - ←

Press the soft key corresponding to your desired parameter. Then press ← to return to upper soft key menu.

7) Press ↓, another group of soft keys will be shown.
   - Y—…→
   - R—…→
   - G—B
   - DCR
   - ←

Press the soft key corresponding to your desired parameter. Then press ← to return to upper soft key menu.

8) Press Y—…→, the following parameters will be shown for your choice.
   - Y-d
   - Y-r
   - ←

Press the soft key corresponding to your desired parameter. Then press ← to return to upper soft key menu.

9) Press R—…→, the following parameters will be shown for your choice.
   - R-X
   - Rp-Q
   - Rs-Q

- ←

Press the soft key corresponding to your desired parameter. Then press ← to return to upper soft key menu.

Parameter setup of FUNCB is the same as that of FUNCA, but FUNCB can be turned off (OFF).

3.1.2 Test range

Measurement range should be selected in accordance with the impedance value of the tested LCR component.

TH2829 has 11 AC measurement ranges: 10Ω, 30Ω, 100Ω, 300Ω, 1kΩ, 3kΩ, 10kΩ, 30kΩ, 100kΩ, 300kΩ, 1MΩ.

TH2829 has 14 DCR measurement ranges: 30mΩ, 100mΩ, 300mΩ, 1Ω, 10Ω, 100Ω, 300Ω, 1kΩ, 3kΩ, 10kΩ, 30kΩ, 100kΩ, 300kΩ, 1MΩ.

Operation steps for setting test range:

1) Move the cursor to the range zone, the following soft keys will be displayed:
   - AUTO The soft key is used to set the range mode to AUTO.
   - HOLD The soft key is used to switch the AUTO mode to the HOLD mode. When the range mode is set to HOLD, the range will be locked in the current measurement range. The current measurement range will be displayed in the range zone.
   - ↑(+) The soft key is used to increase the range under HOLD mode.
   - ↓(-) The soft key is used to decrease the range under HOLD mode.
2) Use soft keys to set measurement range.

3.1.3 Test frequency

The measurement range of TH2829 ranges from 20Hz to 1MHz with an increase or decrease of 0.01Hz. When the test function is set as DCR, the **FREQ** zone will display "---".

Operation steps for setting test frequency:

TH2829A provides two methods to set measurement frequency. The first one is to use soft keys and the other one is to input data by using numeric keys.

1) Move the cursor to the **FREQ** zone, the following soft keys will be displayed.
   - ↑(++)
     This is a coarse adjustment soft key used to increase the frequency. Press this key, the frequency will change as the following sequence: 20Hz, 100Hz, 1kHz, 10kHz, 100kHz, 200kHz and 300kHz.
   - ↑(+)
     This is a fine adjustment soft key used to increase the frequency. There are 10 frequency points that can be set among the 10 times frequency points. Press this key, the frequency will switch between the following ones:

20 Hz	100 Hz	1 kHz	10 kHz	100 kHz	1MHz
25 Hz	120 Hz	1.2 kHz	12 kHz	120 kHz	
30 Hz	150 Hz	1.5 kHz	15 kHz	150 kHz	
40 Hz	200 Hz	2 kHz	20 kHz	200 kHz	
50 Hz	250 Hz	2.5 kHz	25 kHz	250 kHz	
60 Hz	300 Hz	3 kHz	30 kHz	300 kHz	
80 Hz	400 Hz	4 kHz	40 kHz	400 kHz	
	500 Hz	5 kHz	50 kHz	500 kHz	
	600 Hz	6 kHz	60 kHz	600 kHz	
	800 Hz	8 kHz	80 kHz	800 kHz	

- ↓(-)
  This is a fine adjustment soft key used to decrease the frequency. The selectable frequencies are the same as that of ↑(+).
- ↓(--)
  This is a coarse adjustment soft key used to decrease the frequency. The selectable frequencies are the same as that of ↑(++).

2) Use soft keys or numeric keys to select or set frequency. When using numeric keys to input the required frequency value, the soft key displays the available frequency units (Hz, kHz and MHz). You can use unit soft key to input unit and data. When using [ENTER] to input frequency, the default unit is Hz.

3.1.4 Test level

The measurement level of TH2829 can be set according to the RMS value of sine wave signal. The frequency of sine wave signal is the test frequency which is generated by inner oscillator. You can set measurement voltage or current. The output impedance of TH2829 signal source can be 10Ω, 30Ω, 50Ω or 100Ω.When the test function is DCR, the **FREQ** zone will display "---".

————————————————————————————————————

Note: The measurement current is the output one when the tested terminal is short, while the measurement voltage is the output one when the tested terminal is open.

————————————————————————————————————

The auto level control function of TH2829 can realize the measurement of constant voltage or current. The auto level control function (ALC) can be set as ON in <MEAS> page. When the auto level control function is set to ON, "*" will be displayed following the current level value. Refer to <MEAS> for more information.

Operation steps for setting test level:

TH2829 provides two methods to set the level of test signal source. The first one is to use soft keys, while the second one is to input data by numeric keys.

1) Move the cursor to LEVEL, the following soft keys will be displayed.
   - ↑(+)

This soft key is used to increase the level of test signal source.

- ↓(-)

  This soft key is used to decrease the level of test signal source.

2) Soft or numeric keys are used to select or set the test level. When numeric keys are used to input the desired level, the available units (mV, V, μA, mA and A) will be displayed in the soft key zone. Users can use these unit keys to input unit and data. When [ENTER] is used to terminate the input of level, the default level is V or A.

————————————————————————————————————

NOTE: When you need to switch the level between current and voltage, numeric keys and unit soft keys must be used.

————————————————————————————————————

3.1.5 DC bias

TH2829 provides internal DC bias voltage from -10V to +10V. When the test function is selected as DCR, the bias zone will display "---".

Operation steps for setting DC bias:

TH2829 provides two methods to set the DC bias. The first one is to use soft keys, while the second one is to input data by numeric keys.

1) Move the cursor to DC BIAS, the following soft keys will be displayed.
   - ↑(+)

     This soft key is used to increase the output level of DC bias.
   - ↓(-)

     This soft keys is used to decrease the output level of DC bias.
2) Soft or numeric keys can be used to select or set the DC bias source. When numeric soft keys are used to input the desired bias level, the available units ((mV, V, μA, mA and A) will be displayed in the soft key zone. Users can use these soft keys to input unit or data. When [ENTER] is used to terminate the input of bias value, the default unit is V or A.

————————————————————————————————————

NOTE: When you need to switch the DC bias level between current and voltage, numeric keys and unit soft keys must be used.

————————————————————————————————————

Press the [DC BIAS] key on the front panel to allow the output of DC bias. When DC bias is permitted to output, the [DC BIAS] key will be lighted.

3.1.6 Test speed

The test speed of TH2829 is determined by the following factors:

- Integration time (A/D conversion)
- Average times (average test times per each test)

- Measurement delay (from startup to the start of measurement)
- Display time of test results

You can select test mode as FAST, MED or SLOW. Generally, the test result is more stable and accurate in SLOW test mode.

Operation steps for setting test speed:

1) Move the cursor to SPEED, the following soft keys will be displayed:
   - FAST
   - MED
   - SLOW
2) Use above soft keys to set the test speed.

3.1.7 Tools

The test result of TH2829 is displayed as 6 floating-point digits. Decimal point lock function can make TH2829 output the test result in fixed way. Meanwhile this function can change the displayed count of test result. This displayed result can be selected to be shown in large character or small character.

Operation steps for tools

Set the display mode of decimal point in fixed mode according to the following operation steps. Also the character size of test result can be set.

1) Move the cursor to MEAS RESULT DISP zone, the following soft keys will be displayed:
   - **DECIMAL AUTO**
   - **DECIMAL HOLD**
   - **DECIMAL LOCATION +**
   - **DECIMAL LOCATION _**
2) Press **DECIMAL AUTO** to reset the decimal position of the primary or the secondary parameter test result to its default setting.
3) Press **DECIMAL HOLD** to lock the decimal location of primary parameter TEST result.
4) Press DECIMAL LOCATION + to increase the displayed digit by ten times.
5) Press DECIMAL LOCATION _ to decrease the displayed digit by ten times

——

NOTE: Under the following circumstance, the function of decimal lock will be cancelled automatically to recover to floating decimal point status.

- **Test function is changed.**
- **In deviation test, the deviation test mode (ΔABS, Δ%, OFF) is changed.**

——

3.1.8 Save LCR test result by U disk

Users can use U disk to save LCR test result. The following test results and the saving format can be stored in U disk.

1) COMP-ON: FUNCA, primary parameter, secondary parameter, status (0 means normal), sorting result
   COMP-OFF: FUNCA, primary parameter, secondary parameter, status (0 means normal)
   2) DCR: DCR, primary parameter
   3) LIST SWEEP: list, primary parameter, secondary parameter, status (0 means normal), compare result (-1 means lower than the nominal value, while 1 means higher than the nominal value), line NO.

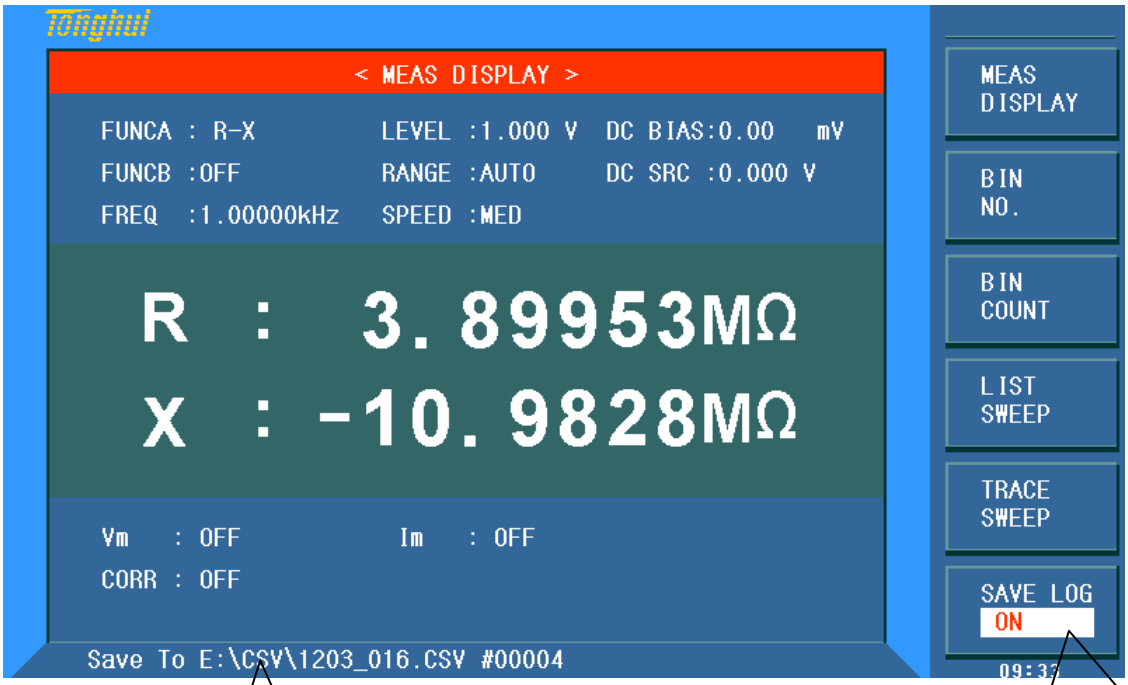

TH2829302

E:\CSV\ is the save path;
1203__16.CSV is the saved file.

#00004 is the saving times.

Save log function is available on MEAS DISP, BIN DISP, LIST DISP

3.2 <BIN NO. DISP>

Press **[DISP]** firstly and then the **BIN NO.** soft key to enter into <BIN NO. DISP> display page. On this page, bin NO. is displayed in upper-case character while the test result, in lower-case character.

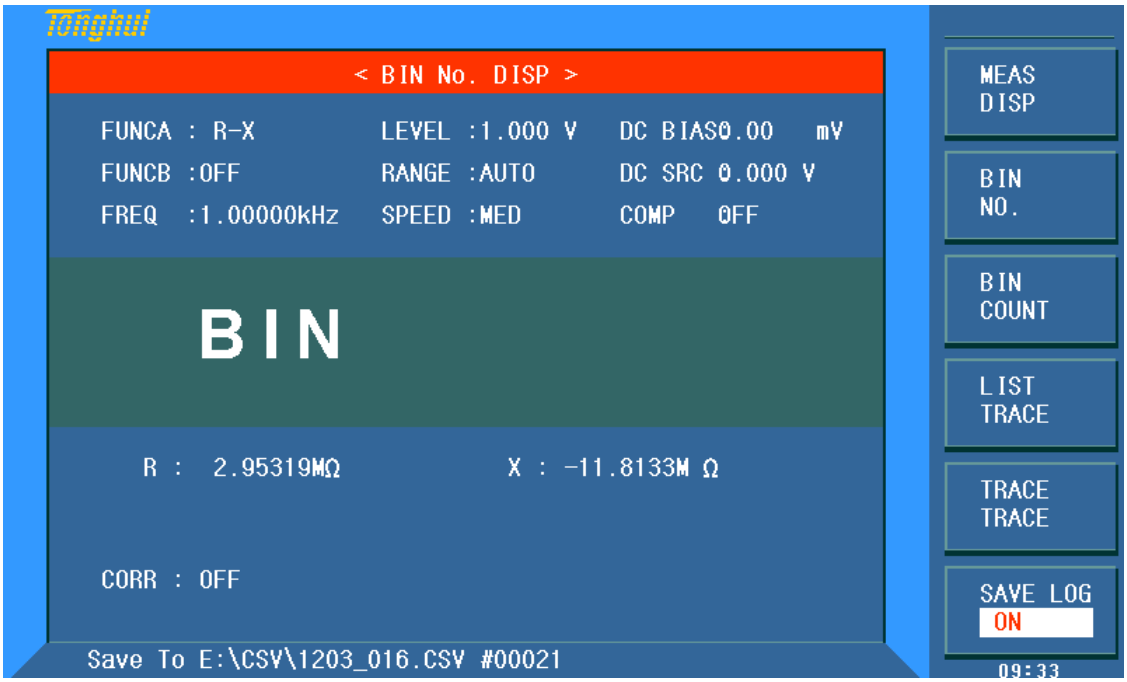

TH2829302

The following control parameters can be set on <**BIN NO. DISP**>.

- Compare function ON/OFF (**COMP**)

There are 2 zones: **BIN NO. DISP**, **COMP**. Their detailed information will be introduced as below.

The following test conditions are displayed in the measurement result/condition zone. These zones cannot be set on this page but can be set on **<MEAS SETUP>**, **<MEAS DISP>** or **<CORRECTION>**.

- Test function (FUNCA)
- Test function (FUNCB)
- Test frequency (FREQ)
- Test level (LEVEL)
- Test range (RANG)
- Test speed (SPEED)
- DC BIAS
- DC Voltage source (DC SRC)
- ON/OFF state of SHORT, OPEN or LOAD correction (CORR)

3.2.1 Comparator function

TH2829 has an inserted compare function which can divide DUT to up to 10 bins (from BIN1 to BIN9 and BIN OUT). Users can set 9 pairs of primary parameter limit and one pair of secondary bin limit. If the primary parameter of DUT is within the range of the bin limit but the secondary parameter is outside of the bin limit, the DUT will be sorted into the auxiliary bin. When TH2829 has installed an HANDLER interface, the compare result will be output into the automatic test

system and further realizing auto-sorting test. These limits can only be set on the <**LIMIT TABLE SETUP**> page. Users can set the compare function to ON or OFF in the **COMP** zone.

Operation steps for compare function

1) Move the cursor to **COMP**, the following soft keys will be displayed.
   - ON
   - OFF
2) Select one of above soft keys to set the compare function as ON or OFF.

3.3 <BIN COUNT DISP>

Press **[DISP]** and then select the soft key of **BIN COUNT** to enter into the <**BIN COUT**> page which shows the count of each bin.



TH2829303

The following control parameters can be set on the <**BIN COUNT**> page.

- Count function ON/OFF (**COUNT**)

There are 2 zones are displayed in this page: **BIN COUNT DISP**, **COUNT**. The function of each zone will be introduced as below.

The following test result/ condition can be displayed in this page but cannot be set in this page. Users can set them on the **<LIMIT TABLE SETUP>** page.

- Test parameter (PARAM)
- Nominal value (NOM)
- Bin limit value (HIGH/ LOW)

3.3.1 PARAM

Parameter zone shows the "Function" parameter, if user selects primary and secondary parameter swap compare mode, the parameter will be displayed as swap parameter, such as: "Cp-D" is displayed as "D-Cp", which means the current D is compared as primary parameter while Cp is compared as secondary parameter.

3.3.2 NOM.

Nominal parameter is the nominal value used to make bin compare.

3.3.3 BIN

This zone shows the bin number of the limit list. "2nd" means the secondary parameter limit.

3.3.4 HIGH/LOW

This zone shows the high and the low limits of the limit list.

3.3.5 COUNT

This zone shows the count value of the current bin.

3.3.6 AUX

This zone shows the count value of the auxiliary bin.

3.3.7 OUT

This zone shows the count value of the out bin.

Operation steps for bin count function

Execute the following operations to set the bin count function ON/OFF on <**BIN COUNT DISP**> page.

1) On < **BIN COUNT DISP**> page, move the cursor to **COUNT** zone, the following soft keys will be displayed.
   - **ON**
   - **OFF**
   - **RESET**
2) Press the soft key **ON** to turn on the count function.

3) Press the soft key **OFF** to turn off the count function.
4) Press the soft key **RESET**, "☺ : Reset count, Sure?" will be displayed in the help zone. Then the following soft keys will be displayed.

■ **YES**
■ **NO**

5) Press the soft key **YES** to reset all bin counts to 0.
6) Press the soft key **NO** to cancel the reset operation.

3.4 <LIST SWEEP DISP>

Up to 10 test frequencies, test levels or DC bias can be set on this page. Users can set the high and the low limits for each list-sweep test point. Auto sweep test will be made on these test points. And their test results will be compared with their limits.

Press down the menu key **[DISP]** and then the soft key **LIST SWEEP** to enter into the **<LIST SWEEP DISP>** page, shown as below.

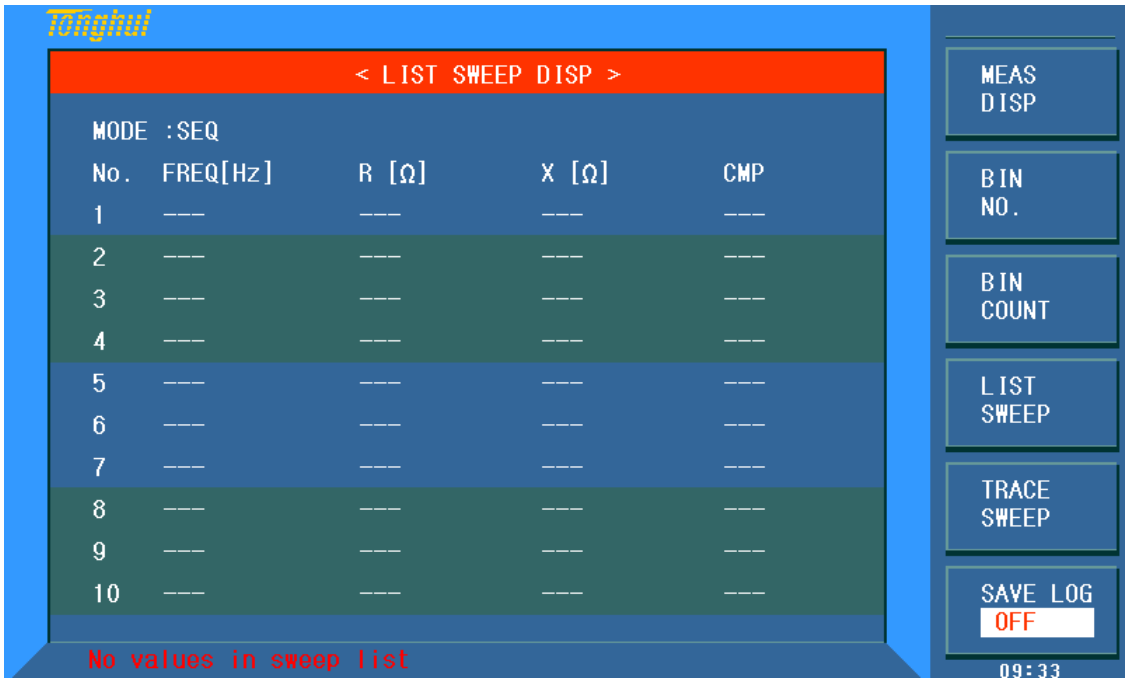

TH2829304

Test points will be automatically tested in a scanning mode. Meanwhile, comparison will be made between test results and limit values. In the process of list sweep test, "►" denotes the current sweep test point. The following control parameters can be set on <**LIST SWEEP DISP**>.

■ Sweep mode (**MODE**)

There are 2 zones on this page: **LIST SWEEP DISP** and **mode**. List sweep points cannot be set on this page but can be set on <**LIST SWEEP SETUP**>.

3.4.1 Sweep mode

The list sweep function of TH2829 can make automatic sweep test for up to 10 points' test frequencies, test levels or DC bias. Two sweep modes are available on TH2829: SEQ and STEP. In SEQ mode, each press of [**TRIGGER**] will direct TH2829 to automatically test all list sweep test points. In STEP mode, each press of [**TRIGGER**] will direct TH2829 to test one list sweep point.

————————————————————————————————————

NOTE: When the trigger mode is set to INT, sweep test modes of SEQ and STEP will not be controlled by [**TRIGGER**].
When the trigger mode is set to MAN, [**TRIGGER**] can be used to trigger the list sweep test.

————————————————————————————————————

Operation steps for setting the list sweep mode:
Set the sweep mode on the <**LIST SWEEP DISP**> page as **SEQ** or **STEP**.

1) On the < **LIST SWEEP DISP** > page, move the cursor to the **MODE** zone, the following soft keys will be displayed:
   - **SEQ**
   - **STEP**
2) Press **SEQ** to set the sweep mode as sequential sweep test mode.
3) Press **STEP** to set the sweep mode as single step sweep test mode.

3.4.2 FREQ (Hz)

This zone shows the currently swept parameter mode and its unit. What are right below this item are parameters of the sweep list.

3.4.3 Cp[F] D[ ]

This zone is the currently swept Function parameter and its unit. What are right below this item are the sweep results.

3.4.4 CMP (Compare)

This zone indicates the compare results of the currently swept points. L means the result is lower than the standard and H is higher than the standard, while blank is medium.

3.5 <TRACE SWEEP>page

Press [DISP] and MEAS DISP, BIN NO. DISP, BIN COUNT, LIST SWEEP, TRACE SWEEP, SAVE DATA will be displayed on the screen. Choose TRACE SWEEP function to enter into the trace sweep page.

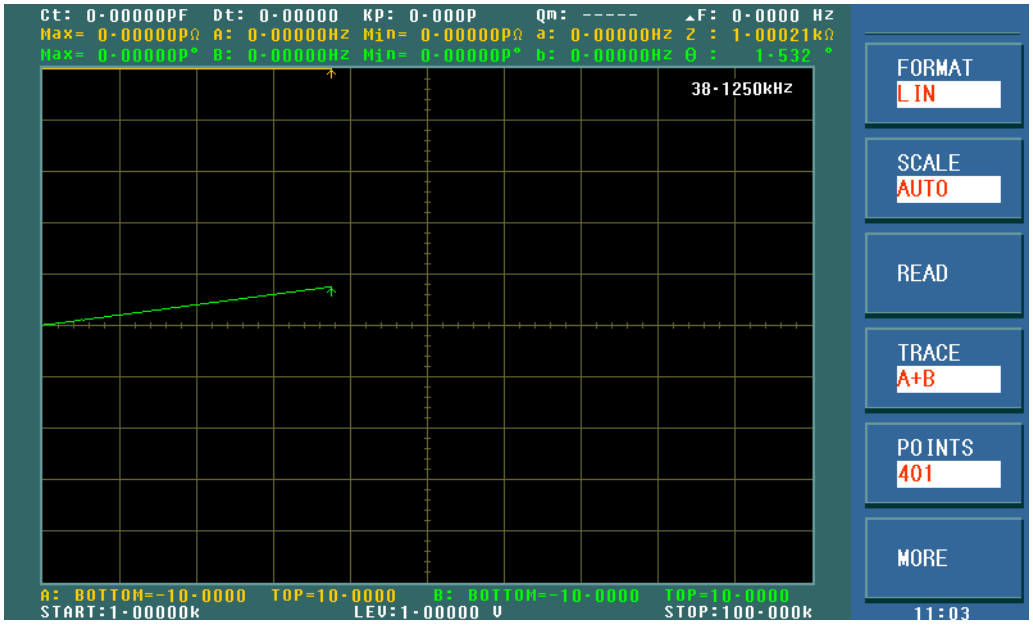

TH2829 3-1

Within the user preset mode, automatic sweeping of the components and parts can be conducted in linearity or logarithm mode with the points of 101, 201, 401 and 801.The LCD screen will dynamically display how the primary and secondary parameters of the measured components change with the mode and condition. Any point of result within the sweep range can be read on the screen. Meanwhile, the MAX and MIN primary and secondary parameters of the measured components and its condition of corresponding mode within the sweep range will be displayed on the screen.

NOTE: when finishing setting the sweep condition, please press [TRIGGER] to start sweeping.

3.5.1 FORMAT

This zone is used to change the coordinate mode of sweeping.

LIN Choose this mode, now the sweep mode is increasing as linearity way, vertical coordinate is distributed as linearity way.

LOG Choose this mode, now the sweep mode is increasing as the long way with the base of 10, vertical coordinate is distributed as the long way with the base of 10.

3.5.2 SCALE

This zone is used to adjust the display scale of the sweep curve.

AUTO It can automatically adjust the display scale of the curve.

HOLD Now, it will hold the current display scale. Users should manually set the parameter of A MIN, A MAX, B MIN and B MAX in <TRACE SWEEP SETUP> page to adjust the display scale of the curve.

3.5.3 READ

Press this key to enter into the selection interface and select ON/OFF to decide whether to display the extreme value and the cursor.

Extreme value is the limit value of the primary and secondary parameters. The cursor is a red line. You can observe the value of the primary and secondary parameters in the same frequency by turning the rotary knob.

3.5.4 TRACE

Press this key to select TRACE A (display the primary parameters only), TRACE B (display the secondary parameters only), TRACE A+B (display the primary and secondary parameters simultaneously).

3.5.5 POINTS

System sets the points as 101, 201, 401 and 801. The more points, the more precise the portrayed figure, but the sweep time will be longer. The default point is 201.

3.5.6 TRIGGER

Press MORE in the TRACE interface, the option of TRIGGER will be displayed. SINGLE is single trigger, CONTINUE is continue trigger.

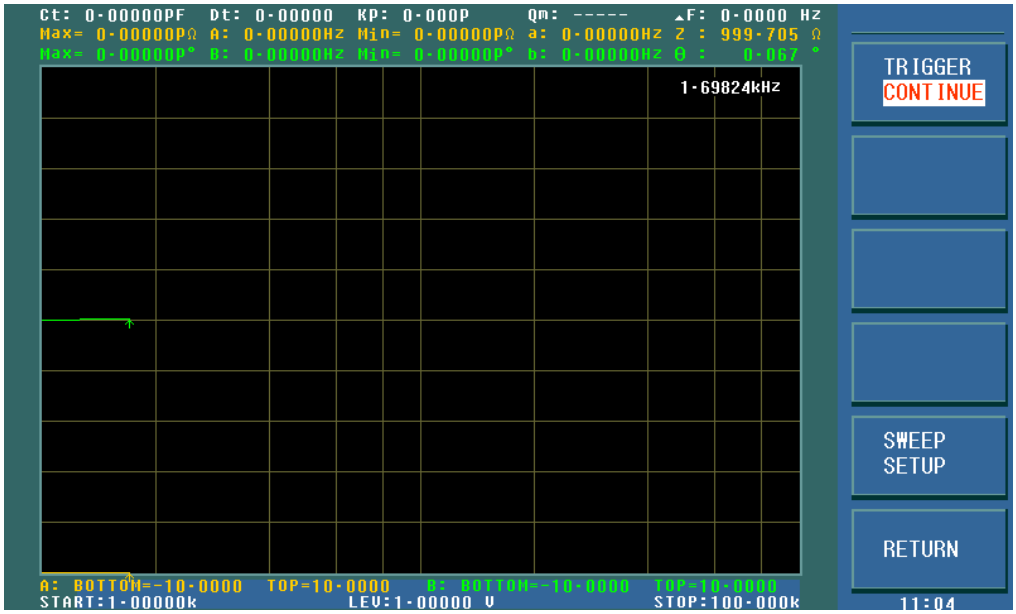

TH2829 3-2

When the user selects the sweep parameter as frequency and impedance, the instrument will display the parameters of some ultrasound components, the detailed parameter is as below:

Static capacitance value when C_t: 1kHz.

Static capacitance value when D_t: 1kHz.

Zmin and its corresponding frequency fs (point a on the screen)

Zmax and its corresponding frequency fp (point A on the screen)

$$\Delta F = fp - fs$$

$$kp \approx \sqrt{\frac{(fp - fs)}{fs} \times 2.51}$$

$$Qm \approx \frac{fp^2}{2\pi fsZminCt(fp^2-fs^2)}$$

3.6 <MEASURE SETUP>

Press **[SETUP]** to enter into the **<MEASURE SETUP>** page shown as below:

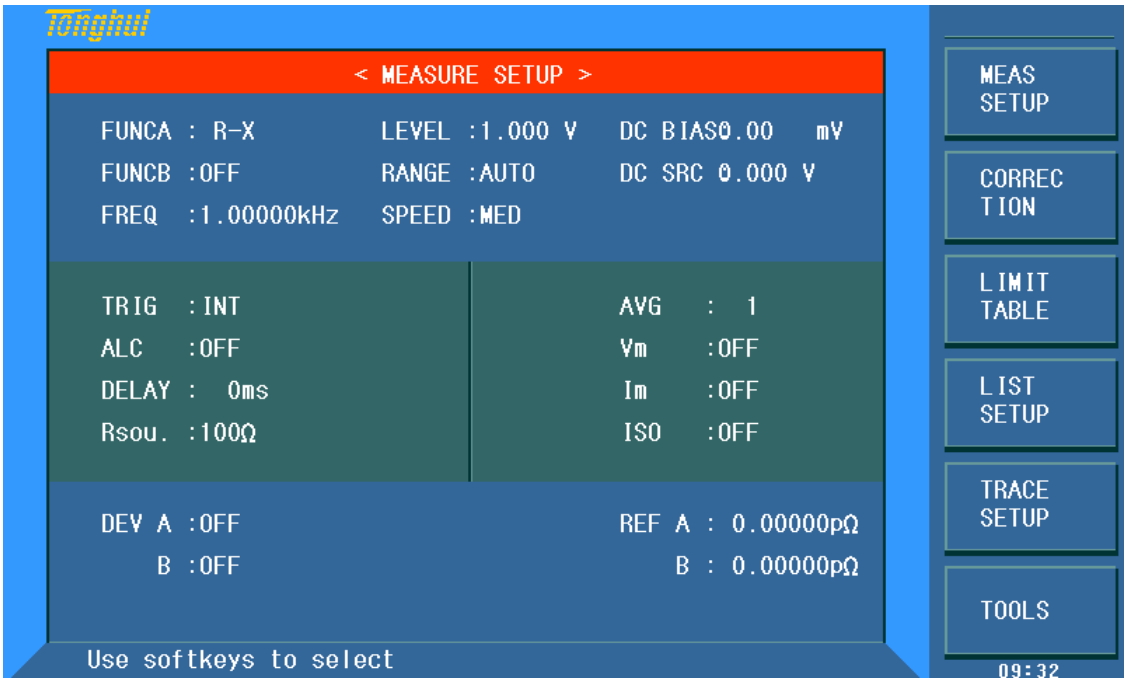

TH2829306

In this page, the following control parameters can be set. (Items in parenthesis can be set)

- Test function (**FUNCA**)
- Test function (**FUNCB**)
- Test frequency (**FREQ**)
- Test level (**LEVEL**)
- Test range **(RANGE**)
- Test speed (**SPEED**)
- DC Bias (**DC BIAS**)
- DC Voltage Source (**DC SRC**)
- Trigger Mode (**TRIG**)
- Auto Level Control (**ALC**)
- Delay Time (**DELAY**)
- Output Resistance (**Rsou.**)
- Average times (**AVG**)
- Voltage Level Monitor ON/ OFF (**Vm**)
- Current Level Monitor ON/ OFF (**Im**)
- Bias Current Isolation ON/ OFF (**ISO**)
- Deviation Test Mode A (**DEV A**)
- Deviation Test Mode B (**DEV B**)
- Deviation Test Reference Value A (**REF A**)
- Deviation Test Reference Value B (**REF B**)

Some zones listed below are as same as that on <MEAS DISP> page, so it is not necessary to introduce in this section, but others will be introduced briefly in the following sections.

- Test function (**FUNCA**)

- Test function (**FUNCB**)
- Test frequency (**FREQ**)
- Test level (**LEVEL**)
- Test range **(RANGE**)
- Test speed (**SPEED**)
- DC Bias (**DC BIAS**)
- DC Voltage Source (**DC SRC**)

3.6.1 Trigger mode

There are 4 trigger modes on TH2829: INT, MAN, EXT and BUS.
When the trigger mode is set as INT, TH2829 will make sequential and repeated tests.
When the trigger mode is set as MAN, press [TRIGGER] once, TH2829 will make one test.
When the trigger mode is set as EXT, once the HANDLER interface receives a positive impulse, TH2829 will execute one measurement.
When the trigger mode is set as BUS, once the IEEE 488 interface receives a TRIGGER command, TH2829 will execute a test. The BUS mode cannot be set on the front panel.

————————————————————————————————————

Note: In the process of testing, when TH2829 receives a trigger signal, it will be ignored. So the trigger signal should be sent after the test is done.
When optional HANDLER interface triggers TH2829, the trigger mode is set as EXT.

————————————————————————————————————

Operation steps for the trigger mode setup
Execute the operation of other trigger modes except BUS trigger. If BUS trigger mode is necessary, then use IEEE4888 interface to send **TRIGger:SOURce BUS** command.

1) Move the cursor to the **TRIGGER** zone, the following soft keys will be displayed:
   - **INT**
   - **MAN**
   - **EXT**
2) Use above soft keys to set the trigger mode.

3.6.2 Auto level control function

Auto level control function can adjust the real test level (voltage across or current through DUT) to the test level value. This function can guarantee the test voltage or current being constant.
When using this function, the test level can be set within the range below:

The range of constant voltage: 10 mV_{rms} to 1 V_{rms}
The range of constant current: 100 μA_{rms} to 10 mA_{rms}

————————————————————————————————————

NOTE: When the constant level function is valid, if the level exceeds above ranges, this function will be automatically set as OFF. The level value currently set is generally deemed as non-constant level value.

————————————————————————————————————

Operation steps for setting auto level control function

Execute the following steps and set the constant level function as ON or OFF.

1) Move the cursor to **ALC** zone, the following soft keys are displayed.
   - **ON**
   - **OFF**
2) Press **ON** to turn on the auto level control function.
3) Press **OFF** to turn off the auto level control function.

3.6.3 Bias current isolation function

Bias current isolation function can prevent the DC current from affecting the test input circuit. In **ISO** zone, users can set the bias current isolation function as ON or OFF. When the bias current isolation function is set as ON, the bias current flowing through DUT can reach 100mA. When the bias current isolation function is set as OFF, the bias current value allowed to flow through DUT is shown as figure 3-1, if the bias current flowing through DUT is over the value in figure 3-1, then instrument cannot work normally.

Figure 3-1 Max. DC bias current

Test range	10 Ω	30 Ω	100 Ω	300 Ω	1 kΩ	3 kΩ	10 kΩ	30 Ω	100 kΩ
Max. current	2 mA	2 mA	2 mA	2 mA	1 mA	300 μA	100 μA	30 μA	10 μA

————————————————————————————————————

Note: Bias current isolation function (ISO) can only be set as ON after installing bias board. After bias current isolation function is turned on, the test accuracy will be influenced, so under the condition of low frequency and bias current, the bias current isolation function should be set as OFF.

————————————————————————————————————

Operation steps for setting the bias current isolation function (Bias board has been installed)

Execute the following steps and set the bias current isolation function as ON or OFF.

1) Move the cursor to **ISO** zone, the following soft keys will be displayed.
- **ON**
- **OFF**

2) Press **ON** to turn on the bias current isolation function.
3) Press **OFF** to turn off the bias current isolation function.

3.6.4 Average

The AVERAGE function can calculate the average value of two or more test results. The average times can be set from 1 to 255 with an increase or decrease of 1.
Operation steps for setting test average times.

1) Move the cursor to the **AVG** zone, the following soft keys are displayed.
   - ↑(+)
     This key is used to increase the average times.
   - ↓(-)
     This key is used to decrease the average times.
2) Use above soft keys to set the average times or use numeric keys and [**ENTER**] input average times directly.

3.6.5 Level monitor function

The level monitor function can monitor the real voltage across DUT or real current through DUT. The monitored voltage value is displayed in **Vm** zone on <**MEASURE DISP**> page while the monitored current value is in **Im** zone.

————————————————————————————————————

Note: The correction function can influence the level monitor function, so when the correction data changes the level monitor value will change. When the correction is switched between OPEN or SHOR or LOAD, the level monitor value will be influenced as well

————————————————————————————————————

Operation steps for setting the level monitor function
Execute the following operation steps to set the level monitor function as ON or OFF.

1) Move the cursor to **Vm** zone, the following soft keys will be displayed.
   - **ON**
   - **OFF**
2) Press **ON** to set the voltage monitor function as ON while press **OFF** to set the voltage monitor function as OFF.
3) Move the cursor to Im zone, the following soft keys will be displayed.
   - **ON**
   - **OFF**
4) Press **ON** to set the current level monitor function as ON while press **OFF** to set the current level monitor function as OFF.

3.6.6 Delay time

TH2829 trigger delay means the delay time from triggering to test-start. Delay function can set the trigger delay time. When the list sweep test function is used, all set delay time will be delayed at each sweep test point. The range of the trigger delay time can be set from 0s to 60s with 1ms as the resolution. The trigger delay function is great useful when the instrument is applied in an auto test system. When the instrument is triggered by HANDLER interface, the trigger delay time can ensure DUT and test terminal has a reliable contact.

Operation steps for setting the delay function

Execute the following steps to set the measurement delay time.

1) Move the cursor to the **DELAY** zone.
2) Use numeric keys to input delay time. After pressing a numeric key, the following unit keys will be displayed. These soft keys can replace **[ENTER]** to input delay time.
   - **msec**
   - **sec**

3.6.7 Output impedance

TH2829 provides four output impedances for your choice: 100 Ω, 50 Ω, 30 Ω and 10Ω. When testing inductance, it is necessary to input the same output impedance so as to make data comparison with other instruments.

Note: When an optional bias board is selected, only 100Ω is available.

Operation steps for setting output resistance

Execute the following operations to set output impedance

1) Move the cursor to the **Rsou** zone, the following soft keys will be displayed.
   - **100 Ω**
   - **50 Ω**
   - **30 Ω**
   - **10Ω**
2) Press **100Ω** to select the output impedance as 100Ω. Press **30Ω** to select the output impedance as 30Ω.

3.6.8 Deviation test function

The deviation test function can make the deviation value (instead of real test value) be directly displayed on the screen. The deviation value is equivalent to the real test value subtracting the pre-set reference value. This function brings great convenience to observe variations of component parameters with temperature, frequency, bias. Bias test function can be used for primary or secondary parameter or primary and secondary parameters meanwhile. The instrument provides two deviation test modes as below:

- ΔABS (Absolute Deviation mode)
  The deviation currently displayed is the difference between the test value of the DUT and the preset reference value. The formula of calculating ΔABS is as below:
  ΔABS=X-Y
  Where, X is the test value of DUT
  Y is the preset reference value.
- Δ% (Percentage deviation mode)
  The deviation currently displayed is the percentage of the difference between the test value of DUT and the preset reference value divided by the reference value. Its calculating formula is as below:
  Δ%=(X-Y)/Y*100[%]
  Where, X is the test value of DUT.
  Y is the preset reference value.

Operation steps for setting deviation test function

1) Move the cursor to the **REF A** zone to input the reference value of the primary parameter, the following soft key will be displayed.
   - **MEAS**

   When the reference component is connected with the test terminal, you should press **MEAS**. Then TH2829 will test the reference component and the test result will be automatically input as the value of **REF A**.
2) Use **MEAS** or numeric keys to input the reference value of primary parameter.
3) Move the cursor to the **REF B** to input the reference value of the secondary parameter, the following soft key will be displayed.
   - **MEAS**

   When the reference component is connected to the test terminal, you should press **MEAS**. Then TH2829 will test the reference component and the test result will be automatically input as the value of **REF B**.
4) Use MEAS or numeric keys to input the reference value of the secondary parameter. If the reference values of primary and secondary parameters have been set in steps 2), you can skip this step.
5) Move the cursor to the **DEV A** zone, the following soft keys will be displayed:
   - **ΔABS**
   - **Δ%**
   - **OFF**
6) Use above soft keys to se the deviation mode of the primary parameter.
7) Move the cursor to the **DEV B** zone, the following soft keys will be displayed.
   - **ΔABS**
   - **Δ%**
   - **OFF**
8) Use above soft keys to se the deviation mode of the secondary parameter.

3.7 <CORRECTION>

Press **[SETUP]** to select **CORRECTION** to enter into the **<CORRECTION>** page.

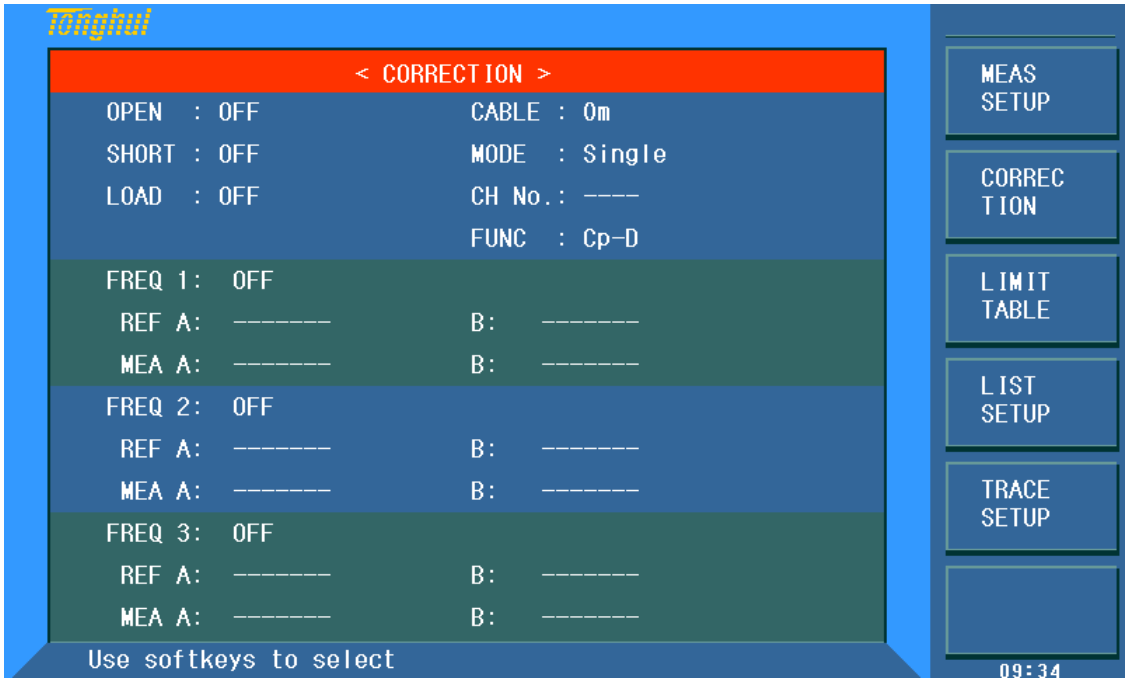

TH2829307

Open, short and load correction on the **<CORRECTION>** page can be used to eliminate the distribution capacitance, spurious impedance and other measurement errors. TH2829 provides two correction modes: the first one is executing open and short correction on all frequency points through interpolation method; the other one is executing open, short and load correction on the frequency point currently set. The following measurement control parameters can be set on the **<Correction>** page.

- Open correction (**OPEN**)
- Short correction (**SHORT**)
- Load correction (**LOAD**)
- Cable length selection (**CABLE**)
- Single/ multiple correction mode selection (**MODE**)
- Frequency points of OPEN, SHOR and LOAD (**FREQ 1**, **FREQ 2**, **FREQ3**)
- Reference values for 3 frequency points of load correction (**REF A**, **REF B**)

There are 16 zones on this page: **Correction**, **Open**, **Short**, **Load**, **Cable**, **Mode**, **Function**, **FREQ 1**, **REF A**, **REF B**, **FREQ 2**, **REF A**, **REF B**, **FRQ 3**, **REF A**, **REF B**. Each control function zone will be introduced in the following paragraphs.

Besides above setting zones, the <**CORRECTION**> page will also display the following monitoring zones. The monitoring zones are similar with the setting zones, but the monitoring zones can only provide reference information and you cannot change state or parameter of these zones.

- Real test results of the load correction (**MEA A**, **MEA B**)
- Under the multiple correction mode, display the current channel number (**CH NO.**)

The real test results of load correction can be tested on **FREQ1**, **FREQ2** and **FREQ3**. Channels of the current multiple correction mode can be set through the multiple-channel sweep interface or IEEE 488 interface.

3.7.1 OPEN

The open correction function of TH2829 can eliminate the error caused by the stray admittance (G, B) parallel-connected with DUT, shown as figure 3-1.

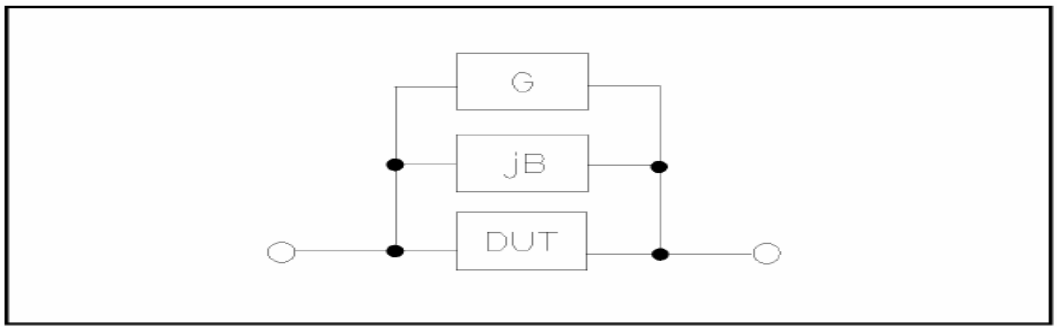

Figure 1 Stray Admittance

TH2829 adopts the following two kinds of open correction data:

- TH2829 will automatically make open correction test on 42 fixed frequency points no matter what the currently set frequency is. Based on the open correction data of the following 42 frequencies, the instrument can calculate all open correction data of different test ranges which corresponds to all test frequencies. Move the cursor to **OPEN** and then used **ALL** to execute full frequency open correction.(The highest test frequency of TH2829A is 300kHz)

20 Hz	100 Hz	1 kHz	10 kHz	100 kHz
25 Hz	120 Hz	1.2 kHz	12 kHz	120 kHz
30 Hz	150 Hz	1.5 kHz	15 kHz	150 kHz
40 Hz	200 Hz	2 kHz	20 kHz	200 kHz
50 Hz	250 Hz	2.5 kHz	25 kHz	300KHz
60 Hz	300 Hz	3 kHz	30 kHz	
80 Hz	400 Hz	4 kHz	40 kHz	
	500 Hz	5 kHz	50 kHz	
	600 Hz	6 kHz	60 kHz	
	800 Hz	8 kHz	80 kH	

- 3 open correction frequencies can be set in **FREQ** on **<CORRECTION>**: FREQ 1, FREQ 2 and FREQ 3. Move the cursor to **FREQ 1**, **FREQ 2**, **FREQ 3,** and then use the **SINGLE** soft key to set the three frequencies respectively.

Operation steps of open correction function

1) Move the cursor to OPEN, the following soft keys will be displayed:

- **ON**

- **OFF**
- **ALL**
- **DCR**

2) Connect test fixture to test terminal. The fixture is open and not connecting to any DUT.
3) Press **ALL,** TH2829 will test the open admittance (capacitance and inductance) under 41 frequencies. It will take about 75 seconds to finish the open full-frequency correction. In the process of correction , the following soft key will be displayed:
   - **ABORT**

   This soft key can be used to terminate the current open correction operation and reserve the formal open correction data.
4) Press **DCR**, TH2829 will test the open-circuit resistance under the DC resistance function.
5) Press **ON** to turn on the function of open-circuit correction, then TH2829 will perform open-circuit correction calculation in the later testing process. IF FREQ 1, FREQ 2 and FREQ 3 are set as OFF, the open-circuit correction data of the current frequency will be calculated by imbedding algorithm. When FREQ 1, FREQ 2 and FREQ 3 are set as ON, the value of the current test frequency will be that of FREQ 1, FREQ 2 or FREQ 3, in this case, the open correction data of FREQ 1, FREQ 2 or FREQ 3 will be used to the calculation of open correction.
6) Press **OFF** to turn off the open correction function. In later measurement, no open correction calculation will be taken.

3.7.2 SHORT

The short correction function of TH2829 can eliminate the error caused by spurious inductance (R, X) in serial with DUT as shown in figure 3-2.

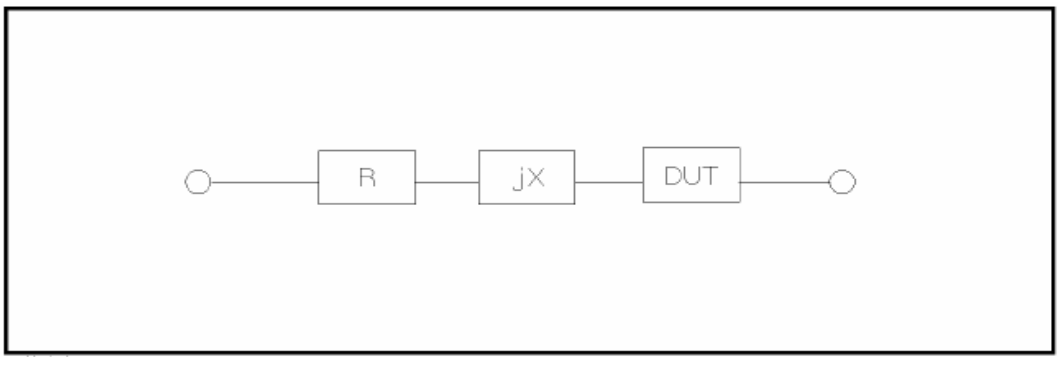

Figure 3-2 Spurious Inductance

TH2829 adopts two kinds of short correction data.

- No matter what the current frequency is, TH2829 will execute short correction test on the 41 fixed frequency points. Except the 41 frequencies, the instrument will adopt imbedding algorithm to calculate the short correction data of different test frequencies which correspond to different

ranges. Move the cursor to the **SHORT** zone, and then use the **ALL** soft key to execute full frequency open correction. The 41 fixed frequencies are the same as that in open correction.

- TH2829 can set 3 short correction frequencies in the **FREQ** zone on the **<CORRECTION>** page: FREQ 1, FREQ 2 and FREQ 3. Move the cursor to **FREQ 1, FREQ 2** or **FREQ 3** and then use **ALL** to short correct the three set frequencies.

Operation steps of short correction function

Short correction includes full frequency short correction which adopts imbedding algorithm and single frequency short correction on 3 frequencies. Execute the following operation steps to make short correction. The single frequency short correction can refer to "Load correction".

1) Move the cursor to the **SHORT** zone, the following soft keys will be displayed:
   - **ON**
   - **OFF**
   - **ALL**
   - **DCR**
2) Connect the test fixture to the test ports. Short the test fixture by using short plate.
3) Press the **ALL** soft key, TH2829 will test the short spurious impedances (resistance and reactance) of 41 frequencies. Short full frequency correction takes about 75 seconds and in this process, the following soft keys will be displayed.
   - **ABORT**

   This soft key can be used to cancel the current short correction operation and reserve the formal open correction data.
4) Press **DCR** , TH2829 will test the short resistance under DC resistance function.
5) Press **ON** to validate the short correction function. TH2829 will make short correction calculation in latter test. If FREQ 1, FREQ 2 and FREQ 3 are set as OFF, the short correction function will calculate the short correction data of the current frequency. If FREQ 1, FREQ 2 and FREQ 3 are set as ON and the current frequency is FREQ 1, FREQ 2 or FREQ 3, the short correction data of FREQ 1, FREQ 2 or FREQ 3 will be used in the calculation of the short correction.
6) Press **OFF** to turn off the short correction function. In latter test, no short correction calculation will be performed.

3.7.3 LOAD

By using transport coefficient between the real test value and the standard reference value at the preset frequency (**FREQ 1**, **FREQ 2** or **FREQ 3**), the load correction of TH2829 can eliminate the test error. It is obvious that open, short, and load correction can be performed at preset frequencies. The 3 preset

frequencies can be set in the setup zones of **FREQ 1**, **FREQ 2** and **FREQ 3**. The standard reference values can be set in the setup zones of **REF A** and **REF B**. The standard test function must be set in the **Func** zone before setting standard reference value. When the cursor moves to FREQ 1, FREQ 2 or FREQ 3, the **LOAD** soft key will be displayed. Press **LOAD** to perform the load correction test.

Operation steps for setting load correction

According to the following steps, perform open/ short/ load correction test at preset frequencies.

1) Move the cursor to **FREQ 1**, **FREQ 2** or **FREQ 3**, the following soft keys will be displayed:
   - **ON**
     Press this soft key to make the open/short/load correction data be available.
   - **OFF**
     Press the soft key to make the open/short/load correction data be unavailable.
   - **OPEN SINGLE**
     Press this soft key to execute open correction at FREQ 1, FREQ 2 or FREQ 3.
   - **SHORT SINGLE**
     Press this soft key to execute short correction at FREQ 1, FREQ 2 or FREQ 3.
   - **LOAD**
     Press this soft key to execute the load correction at FREQ 1, FREQ 2 or FREQ 3.
2) Press the soft key **ON**, the original preset open/short/load correction frequency is displayed on the frequency setting zone.
3) Use numeric keys to input the correction frequency. After pressing any numeric key, the available unit keys (**Hz**, **kHz** and **MHz**) will be displayed on the soft key zone and these soft keys can replace the **[ENTER]** key to input correction frequency. When the **[ENTER]** key is used to input correction frequency, the default unit is Hz.
4) Connect the test fixture to the test terminal.
5) Make the test fixture be open.
6) Press **OPEN ALL** to perform open correction at the current set frequency. The test result (G, B) of the open correction test will be displayed in the help line (the bottom line).
7) Move the cursor to **OPEN**.
8) Press **ON** to perform the open correction calculation at preset frequency in latter measurements.
9) Move the cursor to **FREQ 1**, **FREQ 2** or **FREQ 3** to set the required correction frequency.
10) Make the test fixture be short.
11) Press **SHORT ALL** to perform short correction at preset frequency. The test

result (R, X) of the short correction will be displayed in the help line (the bottom line).

12) Move the cursor to **SHORT**.
13) Press **ON** to perform the short correction calculation at preset frequency in latter measurements.
14) Prepare a standard test component.
15) Move the cursor to **FUNC**.
16) Set the function parameters required to be set.
17) Move the cursor to **REF A**.
18) Use numeric keys and unit keys to input the primary reference values of the standard component.
19) Move the cursor to **REF B**.
20) Use numeric keys and unit keys to input the secondary reference value of the standard component.
21) Move the cursor to the corresponding **FREQ 1**, **FREQ 2** or **FREQ 3**.
22) Connect the standard component to the test fixture.
23) Press **LOAD**, the instrument will execute a load correction. The real test results of the standard component will be displayed in **MEAS A** and **MEAS B**.
24) Move the cursor to **LOAD**.
25) Press **ON** to perform load correction calculation at preset frequencies in latter measurements.

3.7.4 Load correction test function

When performing load correction, the reference value of the standard component is required to be input in advance. The test parameters of reference value should conform with the preset load correction test function.

Load correction function adopts the transport coefficient between the real test value of preset frequency and the standard reference value to eliminate the test error. Load correction function is only available for calculating transport coefficient.

Operation steps for setting load correction test function

Refer to section 3.1.1.

3.7.5 Cable length selection

The available cable length is 0m, 1m, 2m and 4m.

3.7.6 Single/ multi correction mode

Refer to the instruction of the scanting optional interface.

3.8<LIMIT TABLE>

Press **[SETUP]** and then **LIMIT TABLE** to enter into the **<LIMIT TABLE SETUP>** page as the following figure shown.

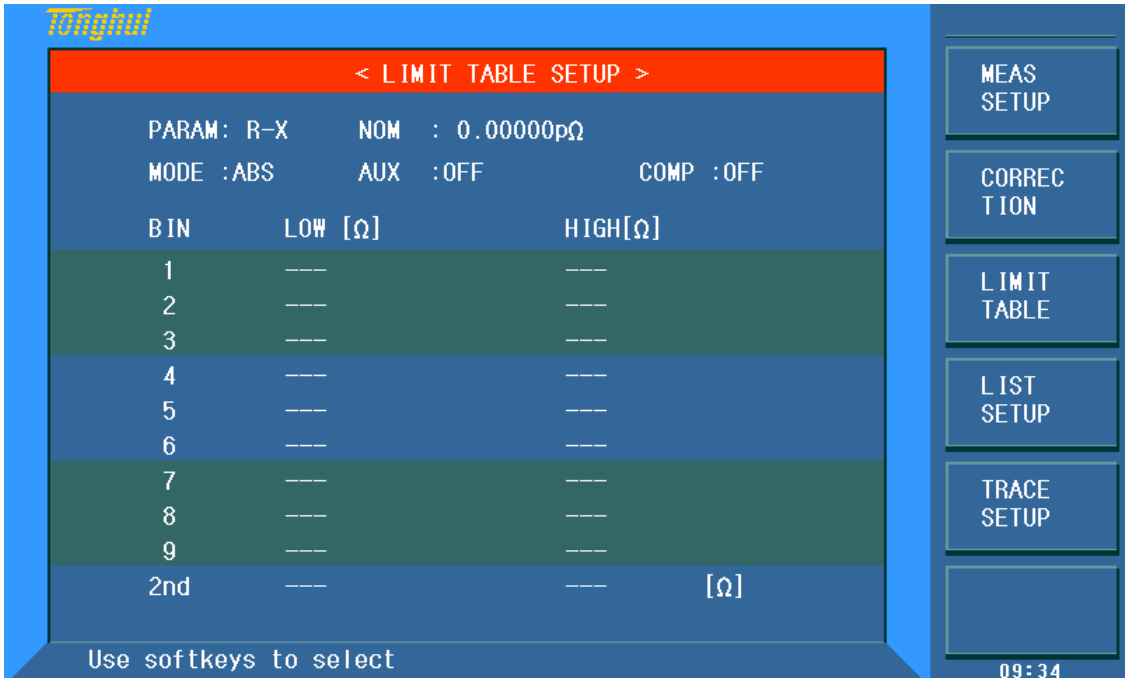

TH2829308

Compare function can be set on this page. TH2829 can set 9 bin limits of primary parameters and one of secondary parameters. The tested result can be divided into up to 10 bins (BIN 1 to BIN 9 and BIN OUT). If the primary parameter of DUT is within the limit range from BIN1 to BIN9, but the secondary parameter is out of the limit range, in this case the DUT will be sorted into aux bin. When TH2829 installs the HANDLER interface and it is used in automatic sorting system, the compare function will be especially useful. The following limit parameter of compare function only be set on **<LIMIT TABLE SETUP>** page.

- Test parameter (**PARAM**)
- Limit mode of compare function (**MODE**)
- Nominal value (**NOM**)
- Auxiliary bin ON/OFF (**AUX**)
- Compare function ON/OFF (**COM**)
- Low limit of each bin (**LOW**)
- High limit of each bin (**HIGH**)

3.8.1 Swap parameter

The swap parameter function can swap the primary and the secondary parameter in **PARAM**. For example, when the test parameter is Cp-D, the swap parameter

function can change the test parameter as D-Cp. Then user can set 9 pairs of compare limits for D, but only 1 pair of compare limit can be set for Cp.

Operation steps for the swap parameter function

Execute the following operations to swap the primary and the secondary parameters.

1) Move the cursor to **PARAM**, the following soft key will be displayed.
   - **SWAP PARAM**
2) Press **SWAP PARAM** to swap the primary and the secondary parameters.
3) Press **SWAP PARAM** to swap the primary and the secondary parameter, which is to recover the formal setup.

3.8.2 Limit modes of compare function

Compare functions has two limit setup modes for primary parameters as shown in figure 3-3.

- Tolerance mode

Under tolerance mode, set the deviation value of the nominal one (be set in the **NOM** zone) as the compare limit value. Deviation value has two modes: percentage deviation and absolute deviation.

- Sequential mode

Under sequential mode, the range of the test value is the compare limit value. The compare limit value should be set in the order from small to large.

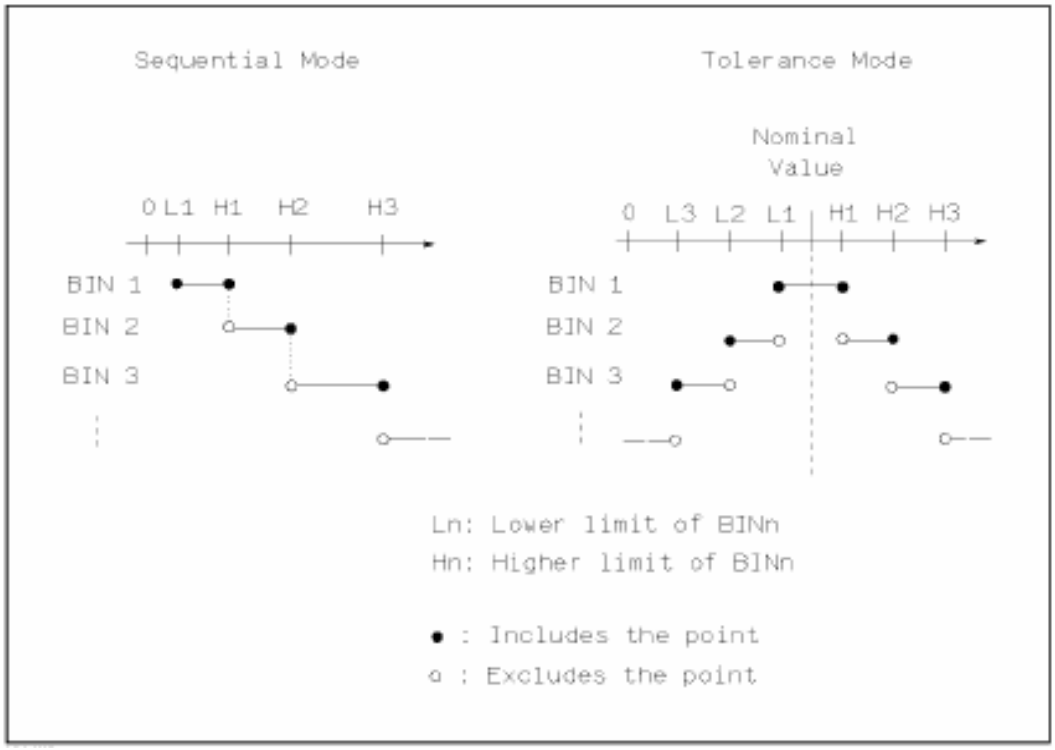

Figure 3-3 Tolerance mode and Sequential mode

Note: When setting limit values of tolerance mode, the error range should be set in the order from small to large. If the error range of BIN1 is the largest one, then all DUT will sort into BIN 1.
Under tolerance mode, the low limit is not necessary to be smaller than the nominal value and the high limit is not necessary to be larger than the nominal value. The limit range of each bin can be discontinues or overlapped.

————————————————————————————————————

Operation steps for setting the limit mode of the compare function

1) Move the cursor to the **MODE** zone, the following soft keys will be displayed.
   - **%TOL**
     This soft key is used to set the limit mode as the tolerance mode of percentage deviation (% TOL).
   - **ABS TOL**
     This soft key is used to set the limit mode as the tolerance mode of absolute deviation (ABS TOL).
   - **SEQ MODE**
     This soft key is used to set the limit mode as sequential mode.
2) Use above soft keys to set the limit mode.

3.8.3 Set nominal value of tolerance mode

When the tolerance mode is selected as the limit mode of the primary parameter, it is necessary to set the nominal value. The nominal value can be any one within the display range.
When the sequential mode is selected as the limit mode the primary parameter, the nominal value can be set, but it is not necessary to use it under this mode.

Operation steps for setting the nominal value

1) Move the cursor to **NOM**.
2) Use numeric keys to input nominal value. After inputting the data, the following soft keys (**p**, **n**, **μ**, **m**, **k**, **M**, ***1**) can replace the **[ENTER]** key to input the nominal value. When using [ENTER] to input the nominal value, the default unit is the same as that input last time. Press ***1** to input nominal value, the instrument will select F, H or Ω as the default unit of the nominal value according to primary parameter.

3.8.4 Comparator function ON/OFF

TH2829 can set 9 bin limits of primary parameters and 1 bin limit of secondary parameters. The tested results can be sorted into 10 bins (BIN 1 to BIN 9 and BIN OUT) at most. If the primary parameter of DUT is within the limit range from BIN 1 to BIN 9, but the secondary parameter is out of the limit range, in this case the DUT will be sorted into aux bin. When TH2829 installs the HANDLER interface and it is used in the automatic sorting system, the compare function will be especially

useful.

Operation steps for setting the compare function ON/OFF

1) Move the cursor to **COMP**, the following soft keys will be displayed.
   - **ON**
   - **OFF**
2) Use above soft keys to set the compare function as ON or OFF.

3.8.5 Auxiliary bin ON/OFF

When it is necessary to sort the secondary parameters, the limits of the secondary parameter can be set in **HIGH** and **LOW** of 2nd.

Three cases may occur in the process of secondary parameter sorting:

- On **<LIMIT TABLE SETUP>** page, no low / high limit of the secondary parameters has been set.
- On **< LIMIT TABLE SETUP >** page, the low/high limit of secondary parameters has been set but **Aux** function is set as OFF.

In this case, only those components whose secondary parameters are qualified can perform primary parameter sorting according to sorting limits. If the secondary parameters are unqualified and the corresponding primary parameters are within limit ranges, those components will be sorted into BIN OUT.

- On <Limit list setup> page, the low/high limit of the secondary parameters has been set and the **Aux** function is set as ON.

If the primary parameter is out of the limit range, it is sorted into BIN OUT. If the primary parameter of DUT is within the limit range but its secondary parameter is out of the limit range, the DUT will be sorted into the **Aux** bin.

————————————————————————————————————

Note: When the secondary parameter only has low limit and the auxiliary bin is set as ON, if the primary parameter of DUT is within the limit range and the secondary parameter is smaller than or equal to its low limit, the DUT will be sorted into the auxiliary bin. When the secondary parameter only has high limit and the auxiliary bin is set as ON, if the primary parameter of DUT is within the limit range and the secondary parameter is larger than or equal to its high limit, the DUT will be sorted into the auxiliary bin.

————————————————————————————————————

Operation steps for setting the auxiliary bin function ON/OFF

1) Move the cursor to **AUX**, the following soft keys will be displayed.
   - **ON**
   - **OFF**
2) Use above soft keys to set the auxiliary function as ON or OFF.

3.8.6 HIGH/LOW

TH2829 can set bin limits of 9 primary parameters and one secondary parameter.

The test results can be sorted into 10 bins at most (BIN 1 to BIN 9 and BIN OUT). The high/low limits of primary parameters can be set in high limit and low limit of bins from BIN 1 to BIN 9. The limit of the secondary parameter can be set in **HIGH** and **LOW** of 2nd.

Operation steps for setting high/low limit

Execute the following steps to set sorting limits.

1) Set **PARAM** and **NOM** in the compare function menu and the limit **MODE** of the primary parameter.
2) Move the cursor to Low limit of BIN 1. If you select tolerance mode, the following operation steps should be from step 3 to step 6; if you select sequential mode, the following operation steps should be from step 7 to step 11.
3) User numeric keys to input low limit value in Low limit. After inputting the data, you can use (**p**, **n**, **μ**, **m**, **k**, **M**, ***1**) to replace **[ENTER]** to input the limit value. When [ENTER] is used, the default unit is the same as that being input last time. When pressing ***1**, the default unit will be F, H or Ω. After inputting limit value in **LOW** of BIN 1, the low limit of BIN 1 will be automatically set as – (absolute limit) and the high limit will be + (absolute limit).
4) The cursor will automatically move to **LOW** of BIN 2. Repeat step 4 until the limits of BIN 9 are input. Then the cursor will automatically move **LOW**of 2nd.
5) After inputting the low limit of the secondary parameter, the cursor will automatically move to **HIGH** of 2nd.
6) Input the high limit of the secondary parameter.
7) In Low limit of BIN 1, use numeric keys to input the low limit. After inputting the data, you can use (**p**, **n**, **μ**, **m**, **k**, **M**, ***1**) to replace **[ENTER]** to input the limit value. When [ENTER] is used to input the limit value, the default unit is the same as that being input last time. When pressing ***1**, the default unit will be F, H or Ω.
8) After inputting the low limit of BIN 1, the cursor will automatically move to **HIGH** of BIN 1. Input the high limit of BIN 1.
9) The cursor will automatically move **HIGH** of BIN 2. For the limit mode is sequential mode, the low limit of BIN 2 will be the high limit of BIN 1. Input the high limit of BIN 2.
10) Repeat step 9 until the high limit of BIN 9 is input. Then the cursor will automatically move to **LOW** of 2nd. Input the low limit of the secondary parameter.
11) The cursor will automatically move to **HIGH** of 2nd. Input the high limit of the secondary parameter.

3.9 <LIST SWEEP SETUP>

Press **[SETUP]** and then **LIST SWEEP** to enter into the **<LIST SWEEP SETUP>** page as shown below.

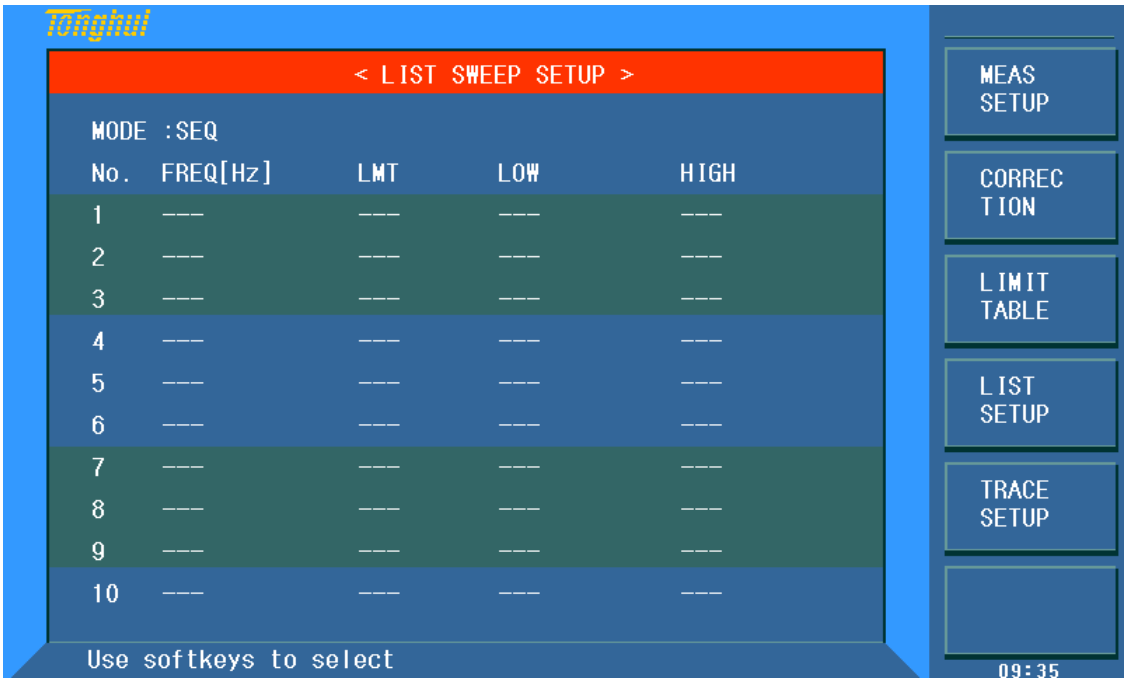

TH2829309

The list sweep function of TH2829 can perform auto sweep test for the test frequency, test level or bias voltage of 10 points. On **<LIST SWEEP SETUP>** page, the following list sweep parameters can be set.

- Sweep mode (**Mode**)
- Sweep parameter setup (frequency **[Hz]**, level **[V]**, level **[I]**, bias **[V]**, bias **[I]**)
- Sweep test point setup (sweep point)
- Selection of limit parameter (**LMT**)
- High/low limit (**HIGH**, **LOW**)

3.9.1 MODE

Mode menu is the same as the mode on <List sweep display> page.

3.9.2 Test parameter

Sweep parameters can be: frequency [Hz], level **[V]**, level **[I]**, bias **[V]**, bias **[I]**.

Operation steps for setting test parameter

1) Move the cursor the line following **MODE**; the following soft keys will be displayed.
   - FREQ [Hz]
   - LEVEL [V]
   - LEVEL [A]
   - BIAS [V]

- BIAS [A]

2) Press one of above soft keys to select the list sweep parameter.

3.9.3 Sweep parameter setup

Move the cursor to the table to perform the setup of each sweep parameter: **FREQ (HZ)**, **LMT**, **HIGH** and **LOW**. Use numeric keys on the front panel to input the data of test frequency/level/bias and high/low limit used to compare, as well as the selected primary/secondary use to compare. After setting, if some inputs are unnecessary, you can execute the function of "Delete line" in the soft key zone to delete the corresponding value.

In the bottom of the **LMT** zone, parameter A indicates that the primary parameters of the measurement result are use to compare with the high and low limits of the table. Parameter B indicates that the secondary parameters of the measurement result are used to compare with the high and low limits of the table. "---" means no compare. The soft key zone has corresponding items. Press the soft key **LMT A**, "A" will be displayed in the **LMT** zone. When press the soft key **LMT B**, "B" will be displayed in the **LMT** zone. While press the soft key **OFF**, data in LMT zone and the corresponding high and low limits will be cleared and be displayed as "---".

3.10 <TRACE SWEEP SETUP>

Press [SETUP], MEAS SETUP, CORRECTION, LIMIT TABLE, LIST SETUP, TRACE SETUP and TOOLS are displayed.

Press TRACE SETUP to enter into the trace setup page.

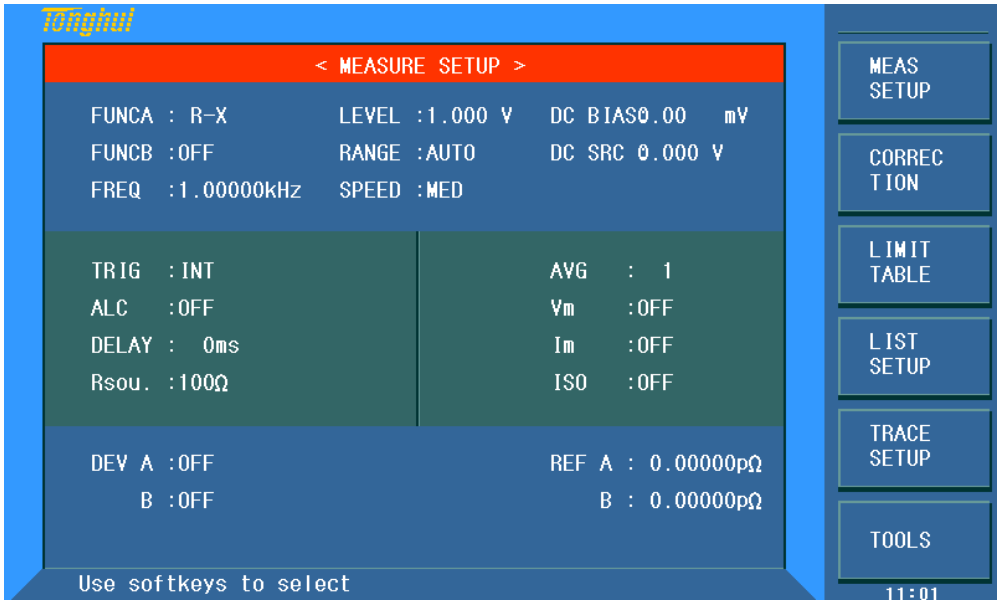

TH2829 3-3

The display function page is used for the setup of trace sweep measurement parameters, including MODE, START, STOP and coordination range of primary and secondary parameter.

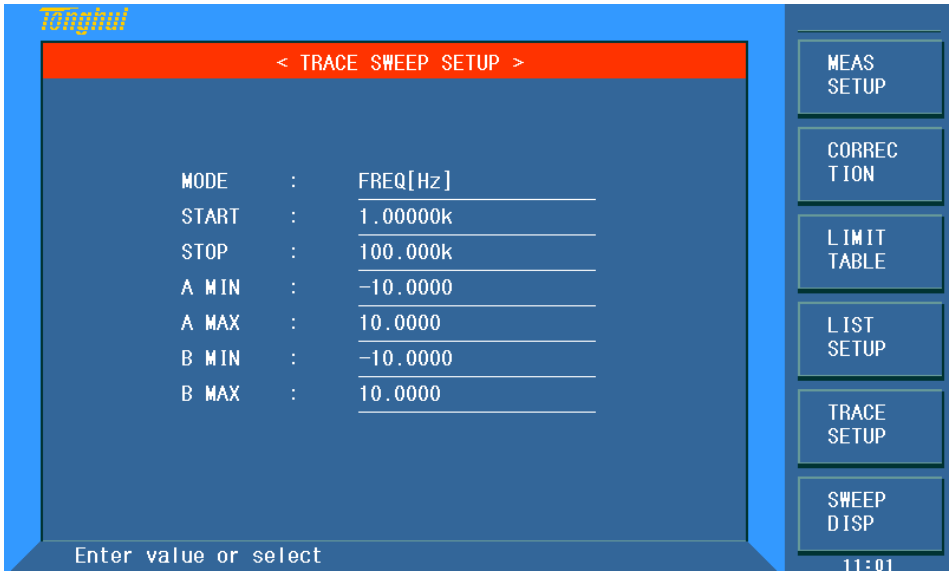

3.10.1 MODE

"MODE" includes [Hz], level [V], level [A], bias [V], bias [A].
Operation：Move cursor to MODE and select corresponding softkey.

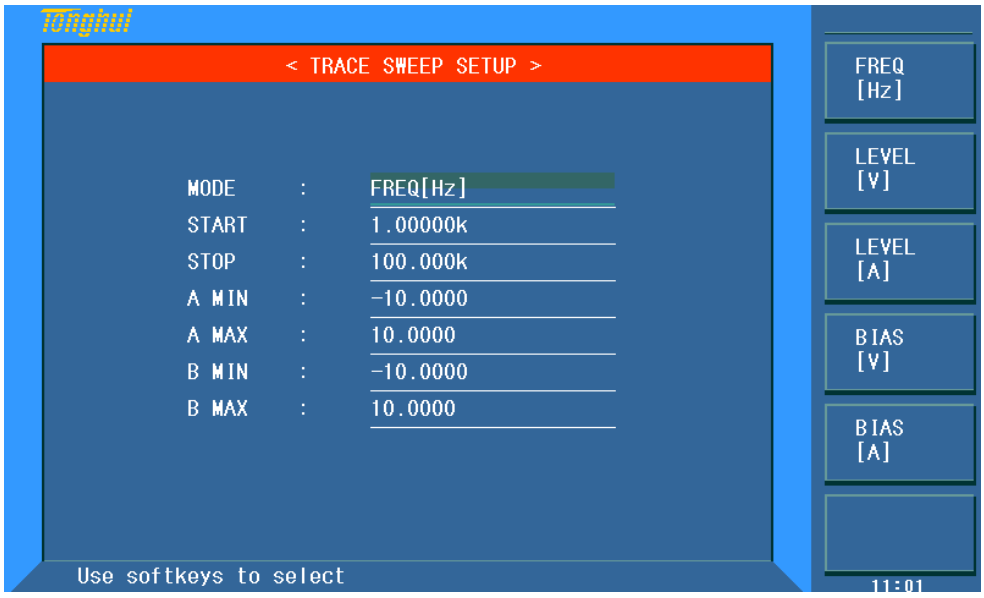

TH2829 3-4

3.10.2 START

Select the number you need on keyboard (0～9/+, -/.) and press enter key or

select a corresponding unit.
NOTE: when the cursor moves to "START", "STOP", "A MIN, A MAX, B MIN, B MAX", "TRACE SWEEP" will be displayed in the soft key zone; press the corresponding softkey to enter into the <TRACE SWEEP DISP> page.)

3.10.3 END

Select the number you need on keyboard (0～9/+, -/.) and press enter key or select a corresponding unit.
NOTE: the END condition should be greater than the START condition, or error message will be displayed on the screen. Also, it should be less than the upper frequency limit. (The upper limit of 2829A is 300kHz, the upper limit of 2829B is 500kHz, the upper limit of 2829C is 1MHz).

3.10.4 Coordination range setting

The coordination range includes A Min, A Max, B Min, B Max, which is the coordination range of primary and secondary parameter, which is used to formulate the frequency response curve drawing range.

Move cursor to zone, input operation: Select the number you need on keyboard (0～9/+, -/.) and press enter key or select a corresponding unit.

The instrument default is automatic coordinate. When the user lock the coordinate, manual setting is needed. As the same, the MAX should be greater than the MIN, or error message will be displayed on the screen.

Chapter 4 [SYSTEM] and <FILE MANAGE>

4.1 <SYSTEM SETUP>

Press **[System]** and then **SYSTEM SETUP** to enter into the **<SYSTEM SETUP>** page shown as below.

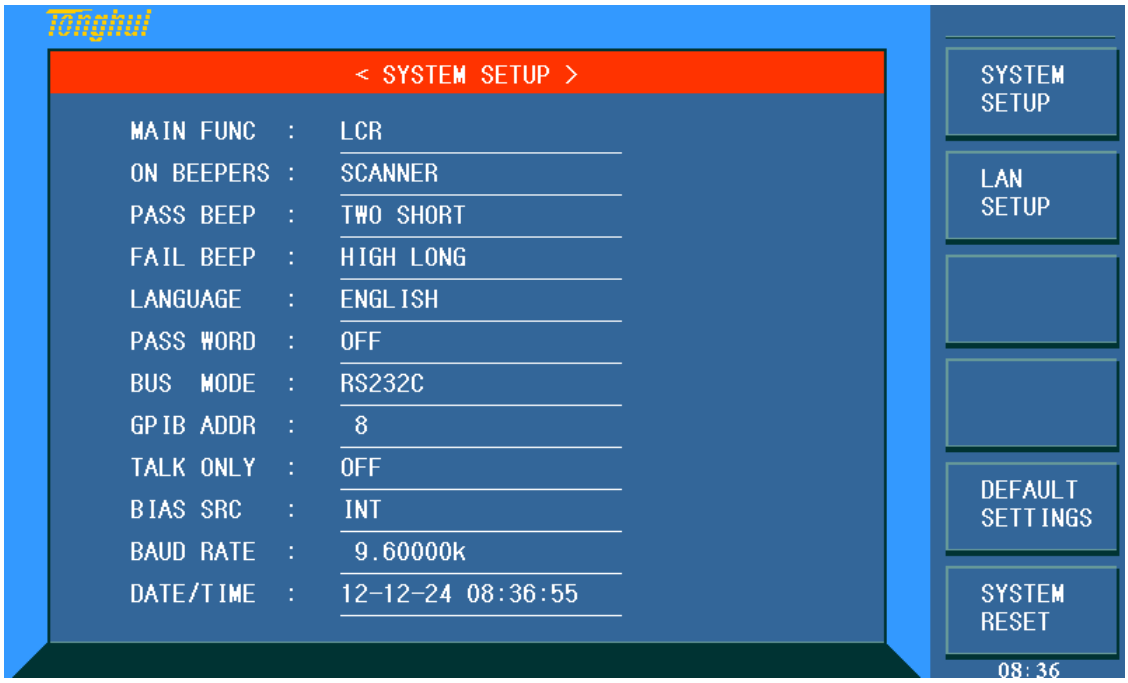

TH2829401

On this page, most system setup items are displayed, such as instrument main function, beeper, PASS beeper, FAIL beeper, language, PASS word, bus mode, GPIB address, TALK only, Bias SRC, baud rate, data/time.

4.1.1 MAIN FUNC

The function of this zone is to control and display available instrument functions.

Operation steps for setting the instrument main function

1) Move the cursor to **MAIN FUNC**, the following soft keys will be displayed.
   - **LCR**

   This soft key is used to select the component measurement function.

4.1.2 ON BEEPERS

This zone is used to control and display the beeper source.

Operation steps for selecting beeper

1) Move the cursor to Beeper, the following soft keys will be displayed.

- MASTER

This soft key is used to select the instrument as the beeper source.

- SCANNER

This soft key is used to select the scanner as the beeper source.

- ALL

This soft key is used to select both the instrument and the scanning box as the beeper source.

4.1.3 PASS BEEP

This zone is used to control and display the beep mode when the test result is qualified.

Operation steps for setting PASS BEEP

1) Move the cursor to **PASS BEEP**, the following soft keys will be displayed.

- **HIGH LONG**

This soft key is used to select high and long beep.

- **HIGH SHORT**

This soft key is used to select high and short beep.

- **LOW LONG**

This soft key is used to select low and long beep.

- **TWO SHORT**

This soft key is used to select two low and short beeps.

- **OFF**

This soft key is used to set the pass beep function OFF.

————————————————————————————————————

Note: In the scanning box, the potentiometer is used to adjust the volume, so when selecting SCANBOX as the beep source, you can only control the volume to be long and short but not high and low.

————————————————————————————————————

4.1.4 FAIL BEEP

This zone is used to control and display the beep mode as **FAIL BEEP** when the test result is unqualified.

Operation steps for setting FAIL BEEP

1) Move the cursor to **FAIL beep**, the following soft keys will be displayed.

- HIGH LONG

This soft key is used to select high and long beep.

- **HIGH SHORT**

This soft key is used to select high and short beep.

- **LOW LONG**

This soft key is used to select low and short beep.

- **TWO SHORT**

This soft key is used to select two low and short beeps.

- **OFF**

This soft key is used to set the fail beep mode OFF.

————————————————————————————————————

Note: In scanning box, the potentiometer is used to adjust the volume, so when selecting SCANBOX as the beep source, you can only control the beep to be long and short but not high and low.

————————————————————————————————————

4.1.5 LANGUAGE

This zone is used to control and display the current language mode of the operating instrument.

Operation steps for setting language

1) Move the cursor to Language, the following soft keys will be displayed.
   - English

   This soft key is used to select English as the operation language.
   - Chinese

   This soft key is used to select Chinese as the operation language.

4.1.6 PASS WORD

This zone is used to display the password –protection mode.

Operation steps for setting the password

1) Move the cursor to Password, the following soft keys will be displayed.
   - **OFF**

   This soft key is used to turn off the password protection mode.
   - **Hold SYSTEM**

   This soft key is used to turn on the password protection function including file protection and starting up password.
   - **Hold FILE**

   This soft key is used to protect user's file.
   - **MODIFY**

   This soft key is used to modify the password. The operation steps are as follows:

   Press **MODIFY** to input a new password. After inputting, a prompt information will appear on the screen to prompt you to confirm the new password. Input the new password again till the modification finishes.

————————————————————————————————————

Note: The default password is 2829.

————————————————————————————————————

4.1.7 BUS MODE (Reserved function)

This mode is used to select RS232C, GPIB, LAN, USBTMC or USBCDC.

Operation steps for setting bus mode

1) Move the cursor to **Bus**, the following soft keys will be displayed.
   - **RS232C**
   - **GPIB**
   - **LAN**
   - **USBTMC**
   - **USBCDC**
2) Use above soft keys to select the required interface bus.

————————————————————————————————————

Note: GPIB optional must be installed before GPIB mode is available.

————————————————————————————————————

4.1.8 GPIB ADDR (Reserved function)

This zone is used to control and display the current GPIB address.

Operation steps for setting GPIB address:

1) Move the cursor to **GPIB ADDR**, the following soft keys will be displayed.
   - ↑ (+)

   This soft key is used to increase the GPIB address.
   - ↓ (-)

   This soft key is used to decrease the GPIB address.

4.1.9 TALK ONLY

The Talk only function is used to control the instrument to send each measurement result to bus through its interface of RS232C, GPIB, LAN, USBTMC or USBCDC. When the talk only function is ON, the instrument cannot be controlled by PC.

Operation steps for setting the talk only function

1) Move the cursor to **TALK ONLY**, the following soft keys will be displayed.
   - ON
   - OFF
2) Press **ON** to turn on the talk only function or **OFF** to turn off this function.

4.1.10 BIAS SRC

Bias source is used to select the DC bias power. The instrument provides 3 kinds of bias source as shown below:

- INT mode

The standard DC bias voltage source is from -10V to +10V and the DC bias current source is from 0 to 100mA.

————————————————————————————————————

NOTE: When the DC bias source is in use, only the output impedance of 100Ω can be used.

————————————————————————————————————

■ OPT mode

The optional DC bias source can provide internal DC bias current source (0~1A).

————————————————————————————————————

NOTE: TH2901-1A optional must be installed, then the mode can be supported.

————————————————————————————————————

■ EXT mode

When the instrument adopts the external bias source to perform on-line test, the EXT mode should be selected. We provide the following external bias source for your choice: TH1773 and TH1776.

————————————————————————————————————

NOTE: TH1773 must be connected, then this mode can be supported.

————————————————————————————————————

Operation steps for setting bias source

1) Move the cursor to **BIAS SRC**, the following soft keys will be displayed.
   - **INT**
   - **OPT**
   - **EXT**
2) Press **INT** to select the INT bias source.
3) Press **OPT** to select the OPT bias source.
4) Press **EXT** to select the EXT bias source.

4.1.11 BAUD RATE

Baud rate is used select the baud rate of the RS232C interface. The available baud rate of this instrument is from 9.600k to 115.200k.

Operation steps for setting the baud rate

1) Move the cursor to **BAUD RATE**, the following soft keys will be displayed.
   - ↑ (+)

     This soft key is used to increase the baud rate.
   - ↓ (-)

     This soft key is used to decrease the baud rate.

4.1.12 DATA/TIME

When moving to the time zone, user should input the password to enter.

4.2 LCR <FILE MANAGE>

TH2829 series instrument can save the user-set parameter to the nonvolatile memory in the form of file, so when use the same setting next time user can load a corresponding file to obtain the parameter set and used last time. By doing so, it can save the time of setting parameter and improve the production efficiency. Press [FILE MANAGE] to enter into the file manage page, shown as below.



TH2829402

4.2.1 Setup file for single-group component (*.STA)

40 groups of different single groups of component set file (*.LCR file) can be saved in the instrument, but the *.LCR file with the number more than 500 should be saved in external U-disc (note: U-disc is an optional accessory).
Use **FILE MANAGE** function on the following File menus, the following data will be saved or loaded in the form of file, which are called *.STA file.

- Control and setting parameter on <MEASURE SETUP> page
  - FUNCA
  - FUNCB
  - FREQ
  - LEVEL
  - RANGE
  - SPEED
  - DC BIAS
  - BIAS SRC
  - TRIGG

- ALC
- DELAY
- Rsou
- AVG
- Vm
- Cm
- ISO
- DEV A
- DEV B
- REF A
- REF B

- Control and set parameters on <BIN COUNT DISP> page
  - BIN COUNT (ON/OFF)
- Control and set parameter on <LIMIT TAABLE SETUP> page
  - PARAM (swap parameter)
  - NOM
  - MODE (%-TOL/ABS-TOL/SEQ-MODE)
  - AUX (ON/OFF)
  - COM (ON/OFF)
  - High and low limits of each bin
- Control and set parameters on <List Sweep Setup> page
  - List Sweep Mode (SEQ/STEP)
  - List Sweep Parameter (Frequency/Level/Bias)
  - Test points of all sweep parameters
  - High and low limits of all test points, including limit parameters (LIMIT-DATA A/LIMIT-DATA B)
- Page format currently displayed

4.2.2 U-disk manage performance

As described above, TH2829 has a standard configuration of USB HOST interface, so the external U-disk can be used as the memory media. In this condition, it breaks the memory limit of 40 groups of *.LCR files. Meanwhile those files can be copied to IBM PC or compatible desk-top computer, laptop with USB interface to reach the infinite extension.

TH2829 supports the USB memory devices as below:

- Meet the USB 1.0/1.1 standard
- Capacity: 32MB/256MB/2GB/4GB
- File format: FAT16, FAT32(Format the USB memory on Microsoft Windows operation system)

4.2.3 Operation steps for file management

A. Search an existed file

1) Roll the knob to view one by one.
2) Use the [←] and [→] to view one page by one page.
3) Press the soft key **FIND**. Input the file name and then press the [ENTER] to search the target file.
4) Input the number and press [ENTER] key can view the file directly from one page to another.

B. Save the following control and setting parameters to a file by the following steps

1) Select and set all control and setting parameters on the desired page.
2) Move the cursor to **FILE MANAGE**, the following soft keys will be displayed.
   - **LOAD**
   - **SAVE**
   - **DEL**
   - **COPY TO E:**
   - **FIND**
   - **EXT**
3) In the file list, move the cursor to the file-saved position or input the file number directly.
4) Press **SAVE**, the following soft keys will be displayed.

- **Yes**
- **No**

5) Press **No** to cancel the current save operation and return step 2.
6) Press **Yes**, and "☺：Input LCR file name：" will displayed
7) Use numeric keys to input the current file name and press [ENTER]. Then TH2829 will save the control and setting parameters as a file in this name.

C. Load the control and setting parameters from a file by the following steps

1) Press File Manage, the file list and the following soft keys will be displayed.
   - **LOAD**
   - **SAVE**
   - **DEL**
   - **COPY to E:**
   - **FIND**
   - **EXT**
2) In the file list, move the cursor to the file-saved position or input the file number directly.
3) Press **LOAD**, the following soft keys will be displayed.

- **Yes**
- **No**

4) Press **No** to cancel the current load operation and return step 1.
5) Press **Yes** to load the currently selected file. Then TH2829 will return the current display page.

D. Copy a file to an U disk by the following steps

1) Assuming that it is necessary to copy internal files 2 to external U-disk.

2) Press **FILE MANAGE**, the file list and the following soft keys will be displayed.
   - **LOAD**
   - **SAVE**
   - **DEL**
   - **COPY to E:**
   - **FIND**
   - **EXT**
3) Move the cursor the file to be copied and press [ENTER] to confirm.
4) Press **COPY to E:** to copy the file the instrument.
5) While copying the file, the progress bar will present the progress of the file copy. When the progress bar is disappeared, the operation of the file copy is finished.

——

NOTE: Please make sure that your U-disk meets the standard that described in this chapter and no write-read protection.

Chapter 5 Execute LCR operation and some examples

5.1 Correction operation

To execute correction operation (in order to prevent the stray impedance from affecting the test accuracy, it is necessary to make open/short correction), users can select one of the two correction modes.

5.1.1 Sweep correction

a) Press the menu key **[SETUP]** and then the soft key **CORRECTION**, the instrument will enter into the **< CORRECTION>** page.
b) Move the cursor to the **OPEN** zone. **ON**, **OFF** and **OPEN ALL** will be displayed in the soft key zone.
c) Keep the test fixture be in the open status, then press **OPEN** to execute open correction till the prompt information zone displays that open correction is finished.
d) Press **ON** to turn on the open correction function.
e) Insert the short plate (TH26010) to the test fixture.
f) Move the cursor to the **Short** zone. **ON**, **OFF** and **SHORT ALL** will be displayed in the soft key zone.
g) Press **SHORT** to execute the short correction till the prompt information zone displays that the short correction is finished.
h) Press **ON** to turn the short correction function.
i) Move the cursor to the **LOAD** zone. **ON**, **OFF** will be displayed in the soft key zone.
j) Press **OFF** to turn off the load correction function.
k) Move the cursor to the **FREQ 1** zone, **ON**, **OFF**, **OPEN SINGLE**, **SHORT SINGLE** and **LOAD** will be displayed in the soft key zone.
l) Press **OFF** to turn off the point-frequency correction function of **FREQ 1**.
m) Move the cursor to the **FREQ 2** zone, **ON**, **OFF**, **OPEN SINGLE**, **SHORT SINGLE** and **LOAD** will be displayed in the soft key zone.
n) Press **OFF** to turn off the point-frequency correction function of **FREQ 2**.
o) Move the cursor to the **FREQ 3** zone, **ON**, **OFF**, **OPEN SINGLE**, **SHORT SINGLE** and **Load** will be displayed in the soft key zone.
p) Press **OFF** to turn off the point-frequency correction function of **FREQ 3**.

5.1.2 Point-frequency correction

This function will gain better results in single-frequency test.
If the test frequency is 5.5kHz,

a) Press the menu key **[SETUP]** and then **CORRECTION**, then instrument will display the **<CORRECTION>** function.
b) Move the cursor to the **Open** zone, **ON**, **OFF** and **OPEN** will be displayed in the soft key zone.
c) Press **ON** to turn on the open correction function.
d) Move the cursor to the **Short** zone, **ON**, **OFF** and **SHORT** will be displayed in the soft key zone.
e) Press **ON** to turn on the short correction function.
f) Move the cursor to the **LOAD** zone, **ON**, **OFF** will be displayed in the soft key zone.
g) Press **OFF** to turn on the load correction function.
h) Move the cursor to the **Freq 1** zone, **ON**, **OFF**, **OPEN SINGLE**, **SHORT SINGLE** and **LOAD** will be displayed in the soft key zone.
i) Press **ON** to turn on the point-frequency correction function of **Freq 1**.
j) Press [5] [.] [5], +5.5 will be displayed in the prompt information zone at the bottom of the screen meanwhile the available units (**Hz**, **kHz** and **MHz**) will be displayed in the soft key zone. Press **kHz**, the **FREQ 1** zone will be changed as 5.5000kHz (be the same as that of test frequency).
k) Keep the test fixture be in open status and press **OPEN** to execute open correction.
l) Insert the short plate (TH26010) to the test fixture.
m) Press **Short** to execute short correction.

5.2 Correct connection of DUT

There are 4 pairs of test terminal: Hcur, Lcur, Hpot, Lpot and corresponding shielding terminal of each terminal.
Each terminal contains shielding layer whose function is to reduce the influence of the ground stray capacitance and the interference of the electromagnetic field. In the process of testing, Hcur, Hpot and Lpot, Lcur should be connected with DUT lead to form a complete 4-terminal measurement, thus reducing the effect of the lead and the connection points on the test results (especially the dissipation measurement). When testing low-ohm components, Hpot, Lpot should be connected to the lead terminal so as to avoid the impedance being added to the lead impedance and the connection principle is that the Hpot and Lpot test should be the actual existed voltage on DUT.
In other words, before connecting to DUT, it is not recommended to connect Hcur, Hpot with Lpot, Lcur, for doing this will increase test error.
If the connection point and the lead resistance R lead are far weaker than the

tested impedance (for example: $R_{lead}<Z_x/1000$, the accuracy error is required to be less than 0.1%), before connecting to DUT, it is recommended to connect Hcur, Hpot and Lpot, Lcur (Two terminal test).

In the test with high accuracy requirement, using Kelvin test fixture (standard accessory) will gain better results than using test leads. When Kelvin test lead is used under 10kHz, a better measurement result can be obtained. However, when the frequency is higher than 10kHz, it cannot meet the measurement demand. In high frequency, the change of the clearance between test leads will directly change stray capacitance and inductance on test terminals and this problem is unavoidable, because the test leads cannot be fixed in a position.

So, the use of the test fixture should be used as possible in high frequency. If the test fixture is unavailable or cannot be used, the status of test leads should be the same in the processes of correction and test.

No matter the standard Kelvin test fixture or Kelvin test leads or user-made fixture is used, the following requirements should be met.

1. Distribution impedance must be reduced to the Min. especially when testing high impedance components.
2. Contact resistance must be reduced to Min.
3. Short and open must be available between contact points. Open and short correction can easily reduce the influence of distribution impedance of the test fixture on measurement. For open correction, the clearance between test terminals should be the same with that when they connects with DUT. For short correction, the short plate of low impedance should be connected between test terminals. Another way is to directly connect Hc with Lc or Hp with Lp, then connect both.

Note: When the DUT is a polarity component, before testing, the high potential terminal should be connected to the terminal with mark "+", "Hc" or "Hp" and the low terminal should be connected to the terminal with mark "-", "Lc" or "Lp".

Warning: Before testing, please discharge the tested polarity component so as to avoid the damage to the instrument.

5.3 Eliminate the influence of stray impedance

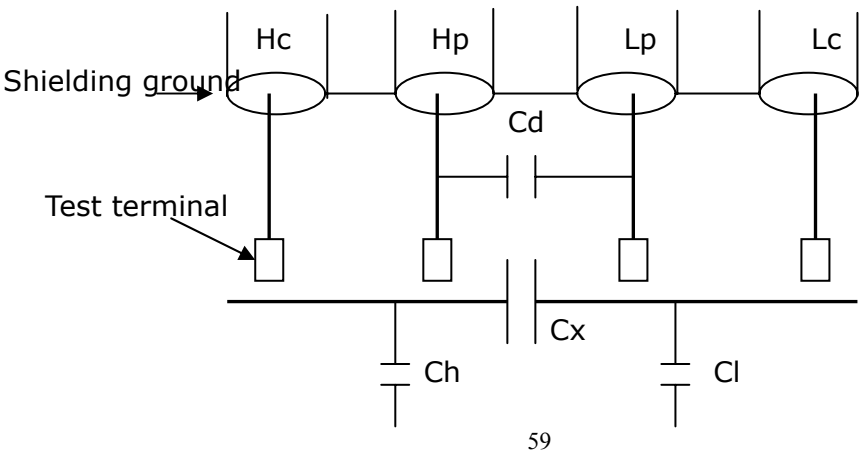

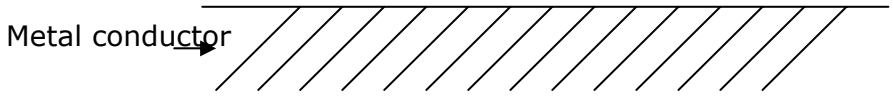

Figure 5-1 Influence of stray capacitance

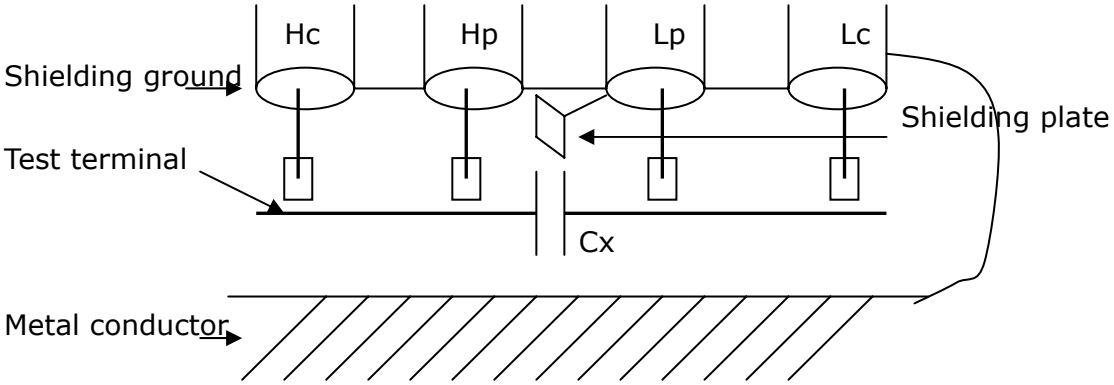

Figure 5-2 Eliminate the influence of stray capacitance

When the DUT has high impedance(such as small capacitance), the influence of stray capacitance cannot be ignored. Figure 5-1 is an example of the use of 4 terminal pair measurement. In this figure, Cd is connected with Cx in a parallel way and when a conductance plate is positioned under DUT, capacitance Ch will connect with Cx in parallel after connecting with Cl in series and by this way the measurement result will have errors. If a ground conductor is installed between high and low terminals, Cd can be reduced to Min. Meanwhile if the ground terminal is connected to the conductance plate, the influence of Ch and Cl will be eliminated.

When the DUT is low impedance (such as small inductance, large capacitance), a large current will flow through test leads Hc and Lc. In this case, **electromagnetic coupling between test leads becomes the main source of test errors** except the influence of the contact resistance on test terminals. If this coupling cannot be eliminated, it will bring unexpected influence on test results. Generally, contact resistance affects the resistance of impedance and electromagnetic affects the reactance of impedance. Test terminals can adopt 4TP connection method. For 4TP connection, the currents flow though Hc and Lc are equal in value and opposite in direction with those flowing through each shielding terminals. By this way, the magnetic fields produced by these currents can be mutually offset and further eliminate the influence of mutual inductance coupling on test results.

5.4 Operation example for testing inductance with TH2829A

Test Condition

Function: Ls-Q

Frequency: 5.5kHz

Level: 1.5Vrms
Internal impedance: 100Ω

Operation steps

1) Turn on the instrument.
2) Set basic parameters
   a) Press [DISP] to enter into the <MEAS DISP> page.
   b) Use the knob to move the cursor to FUNC, the current item is displayed as Cp-D. Meanwhile Cp—…→, Cs—…→, Lp—…→, Ls—…→, Z—…→, ↓ will be displayed in the soft key zone.
   c) Press the soft key Ls—…→, Ls-D, Ls-Q and Ls-Rs will be displayed.
   d) Press Ls-Q to select the Ls-Q function.
   e) Move the cursor to Freq., the current frequency is 1.0000kHz.
   f) Press [5][.][5], +5.5 will be displayed in the prompt information zone at the bottom of the screen. The available units Hz, kHz and MHz will be displayed in the soft key zone. Press kHz, the frequency will be changed as 5.5000kHz.
   g) Move the cursor to LEVEL, the current displayed level will be 1.000V.
   h) Press [1][.][5], +1.5 will be displayed in the prompt information zone at the bottom of the screen. The available units mV, V, μA, mA and A will be displayed in the soft key zone. Press [ENTER], the level will be changed as 1.5V.
   i) Press [SETUP] to enter into the <MEAS SETUP> page.
   j) Move the cursor to R_{int} zone, 100Ω , 50Ω , 30Ω and 10Ω will be displayed in the soft key zone.
   k) Press 100Ω to select 100Ω as the signal internal impedance.
3) Connect the test fixture (TH26005) to the test terminals of TH2829A.
4) Execute correction (To avoid the influence of stray impedance on measurement accuracy, Open/ Short correction must be operated) (refer to 5.1.2 "Point-frequency correction")
5) Mount the tested inductance to the test fixture.
6) Execute test operation.

Press [DISP] to enter into the <MEAS DISP> page. The instrument can test continuously and the test result will be displayed in upper case character in the center of the page, shown as below:



TH2829501

7) If the test result is obviously incorrect, please check the following items.

a) Check the tested inductance is in good connection with the test fixture or not.

b) Check the test fixture is in good connection with the test terminals of the instrument or not.

c) Redo the open/short correction.

✱**NOTE:** When the sweep open/short correction is used, the point-frequency correction function should be set as OFF. Refer to Correction operation in this chapter.

5.5 Operation example of testing capacitance by multi-frequency list sweep

Test condition:

Function: Cp-D

Level: 1Vrms

Other parameters

Frequency	**Compare parameter**	**Low limit**	**High limit**
1kHz	Cp(capacitance)	325.0nF	333.0nF
10kHz	D（Dissipation）	0.0001	0.0003
100kHz	D（Dissipation）	0.0060	0.0100

Beep: HIGH LONG

Alarm mode: OUT

Operation steps

1) Turn on the instrument.

2) Set basic parameters.
   a) Press [DISP] to enter into the <MEAS DISP> page.
   b) The **FUNC** zone is currently displayed as Cp-D and the Level zone is 1.000V.
   c) Press [SETUP] to enter into the <MEAS SETUP> page, meanwhile the following soft keys will be displayed in the soft key zone: MEAS SETUP, CORRECTION, LIMIT SETUP, SWEEEP SETUP and FILE MANAGE.
   d) Press SWEEP SETUP to enter into the <SWEEP SETUP> page.
   e) Move the cursor to the **SWEEP PARAM** zone. Then this zone will be displayed as FREQ[Hz].
   f) Use the knob to move the cursor to the parameter zone of sweep point 1, then this zone will displayed as ---.
   g) Press [1], +1 will be displayed in the prompt information zone and the soft key zone will display available units: Hz, kHz and MHz. Press kHz, this zone will be changed as 1.0000k.
   h) Press [→] to move the cursor to the LMT zone of sweep point 1, then this zone will be displayed as ---. The soft key zone will display: LIMIT DATA A, LIMIT DATA B and OFF.
   i) Press LIMIT DATA A to select the compare primary parameter Cp function. This zone will be display A and the cursor will automatically move the low limit zone of sweep point 1.
   j) Press [3][2][5], +325 will be displayed in the prompt information zone and the following available units will be displayed in the soft key zone: p, n, μ, m and k. Press n, this zone will be changed as 325.000n. Then the cursor will automatically move the high limit zone of the sweep point 1.
   k) Press [3] [3] [3], +333 will be displayed in the prompt information zone and the following units will be displayed in the soft key zone: p, n, μ, m and k. Press n, this zone will be changed as 333.000n and the cursor will automatically move to the parameter zone of sweep point 2.
   l) Press [10], +10 will be displayed in the prompt information zone and the soft key zone will display the following available units: Hz, kHz and MHz. Press kHz, this zone will be displayed as 10.0000k.
   m) Press [→] to move the cursor to the LMT zone of sweep point 2, this zone will be displayed as---. The following soft key will be displayed in the soft key zone: LIMIT DATA A, LIMIT DATA B and OFF.
   n) Press LIMIT DATA B to select the compare secondary parameter D function. This zone will be displayed as B and the cursor will be automatically moved to the low limit zone of the sweep point 2.
   o) Press [0][.][0][0][0][1], +0.0001 will be displayed in the prompt information zone and the soft key zone will display the following available units: p, n, μ, m and k. Press [ENTER], this zone will be changed as 100.000μ and the cursor will automatically move to the high limit zone of sweep point 2.
   p) Press [0][.][0][0][0][3], +0.0003 will be displayed in the prompt

information zone and the soft key zone will display the following available units: p, n, μ, m and k. Press ENTER, this zone will be changed as 300.000μ and the cursor will automatically move to the parameter zone of sweep point 3.

q) Based on 1-p steps, input 100kHz, B, 0.0060 and 0.0100 for the 3rd sweep point.

3) Alarm setup
   a) Press [SYSTEM] to enter into the <System Setup> page.
   b) Move the cursor to the FAIL BEEP zone to select HIGH LONG.
4) Mount the test fixture (TH26005) to the test terminals of TH2829.
5) Execute correction function (To avoid the influence of the stray impedance on the measurement accuracy, it is necessary to execute open/short correction (refer to chapter 5.1.1 Sweep Correction)).
6) Insert the tested capacitor to the test fixture.
7) Execute test operations.

Press [DISP] and then List Sweep to enter into the <List Sweep Display> page. The instrument will test continuously and then display the test and the compare results on page. If the compare result is H (higher than the high limit) or L (lower than the low limit), there is a beep alarm. The following figure shows the measurement display page.

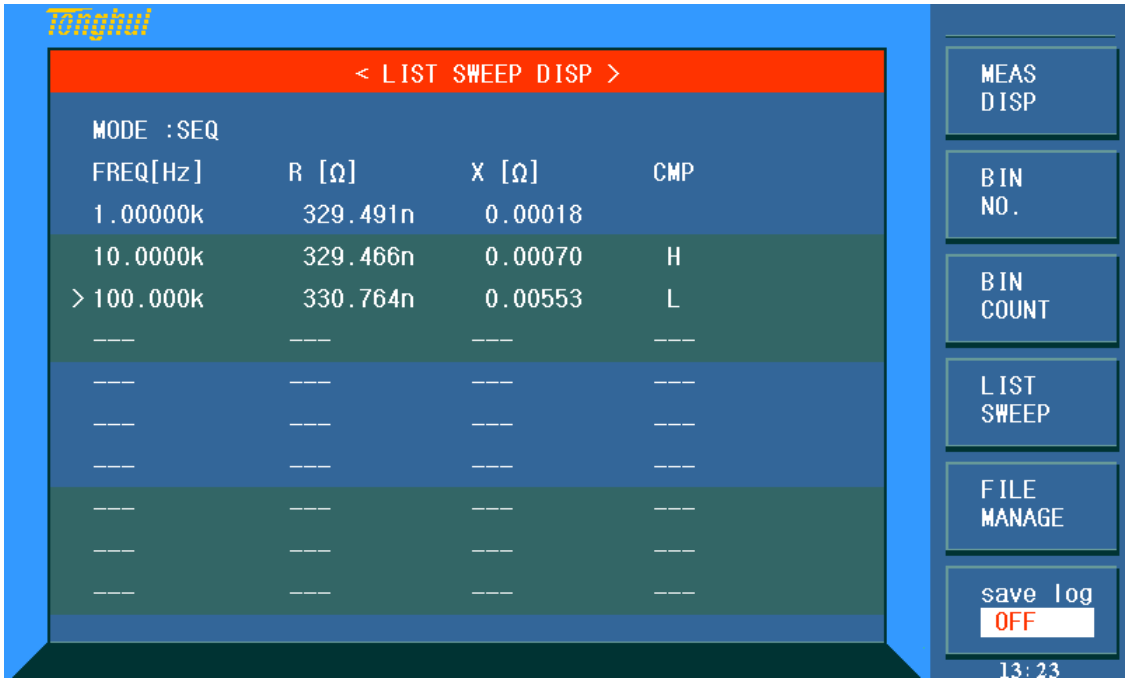

TH2829502

8) If the test result is obviously incorrect, please check the following items.

d) Check the tested inductance is in good connection with the test fixture or not.

e) Check the test fixture is in good connection with the test terminals of the instrument or not.

f) Redo the open/short correction.

✱**NOTE:** When the sweep open/short correction is used, the point-frequency

correction function should be set as OFF. Refer to Correction operation in this chapter.

5.6 Operation example of load correction

1) Operation steps

Test condition

Frequency: 100kHz

Cp: 11nF

D: 0.0005

a) Press [SETUP], the following soft keys will be displayed in the soft key zone: MEAS SETUP, CORRECTION, LIMIT SETUP, SWEEP SETUP, FILE MANAGE and TOOL.

b) Press CORECTION to enter into the <CORRECTION> page.

c) Move the cursor to Open, the following soft keys will be displayed in the soft key zone: ON, OFF and OPEN ALL.

d) Press ON to turn on the open correction function.

e) Move the cursor to Short, the following soft keys will be displayed in the soft key zone: ON, OFF and SHORT ALL.

f) Press ON to turn on the short correction function.

g) Move the cursor to **LOAD**, the following soft keys will be displayed in the soft key zone: ON and OFF.

h) Press ON to turn on the load correction function.

i) Move the cursor to **FUNC**, this zone will display Cp-D. Meanwhile Cp—…→, Cs—…→, Lp—…→, Ls—…→, Z—…→, ↓ will be displayed in the soft key zone.

j) Press Cp-D to select the Cp-D function.

k) Move the cursor to FUNC 1 zone, the following soft keys will be displayed in the soft key zone: ON, OFF, OPEN SINGLE, SHORT SINGLE and LOAD.

l) Press ON to turn on the point-frequency correction function of **FREQ 1**.

m) Press [1][0][0], +100 will be displayed in the prompt information zone and the soft key zone will display the following available units: Hz, kHz and MHz. Press kHz, the **FREQ 1** zone will be changed as 100.000kHz (the same with the test frequency).

n) Move the cursor to the **REF A:** zone of the frequency 1. Press [1][1], +11 will be displayed in the prompt information zone and the following available units will be displayed in the soft key zone: p, n, μ, m and k. Press n, this zone will be changed as 11.0000nF.

o) Move the cursor the **REF B:** zone of the frequency 1. Press [0][.][0][0][0][5], +0.0005 will be displayed in the prompt information zone and the following available units will be displayed in the soft key zone: p, n, μ, m and k. Press [ENTER], this zone will be changed as 0.00050.

p) Move the cursor to Freq 1. The following soft keys will be displayed: ON, OFF, OPEN SINGLE, SHORT SINGLE and LOAD.

q) Hold the test fixture be in open status and keep user's hands or other

interference source be far away from the test fixture. Press the soft key Open to execute open correction.

r) Insert the short plate (TH26010) into the test fixture. Please ensure that the short plate and the reeds of the test fixture have good contact.

s) Press the soft key SHORT SINGLE to execute short correction.

t) Insert a standard capacitance into the test fixture. Please ensure that the pins of the standard capacitance have good connection with the reeds of the test fixture.

u) Press the soft key LOAD to execute load correction.

2) Note

a) Because of the different software editions, the soft keys and status information may be different form this book, but it may not affect users' understanding.

b) The load correction is only valid for the components with the same specification. If the specification is changed, it is required to redo load correction.

Chapter 6 Performance and Test

6.1 Test function

6.1.1 Parameter and symbol

C：capacitance L：Inductance
R：resistance Z：impedance Y：Admittance
X：reactance B：susceptance G：Conductance
D：dissipation θ：phase angle Q：Quality factor

Lk: leakage inductance DCR: DC resistance

Test combination
Parameters described above are combined in the following modes:

Primary parameter	Z, Y	L, C	R	G
Secondary parameter	θ（deg phase）, θ（rad radian）	D, Q, R_S, R_P, G	X	B

There is no combination for DCR.

6.1.2 Mathematical operation

Operation between the measurement value and the programmable nominal value: absolute deviation ΔABS and percent deviation Δ%.

6.1.3 Equivalent mode

Series and parallel

6.1.4 Range

Auto, Manual (Hold, increase and decrease)

6.1.5 Trigger

Internal, external and manual
Internal: Test DUT constantly and display the result
Manual: Press TRIGGER to test once then the result will be displayed.
External: After HANDLER receiving “start” signal, perform a measurement and output test result.

6.1.6 Delay time

Delay time: time from trigger to start. 0 to 60s are programmable with a resolution of 1ms.

6.1.7 Connection modes of test terminals

TH2829A adopts 4-terminal test method.
HD(Hcur): current sample high terminal
LD(Lcur): Current sample low terminal
HS(Hpot)：voltage sample high terminal
LS(Lpot): Voltage sample low terminal

6.1.8 Test speed (Frequency>=10kHz)

Fast：about 75 times/s（13ms/time）
Medium：about 11 times/s（90ms/time）
Slow：about 2.7 times/s（370ms/time）
The fast and middle speed will be slow down when frequency <10kHz.

6.1.9 Average

Be programmable from 1 to 255.

6.1.10 Display digit

6 digits, max. displayed digit: 999999

6.2 Test signal

6.2.1 Test signal frequency

Test signal is sine wave, accuracy：0.01%
Frequency range：
20Hz～300kHz（TH2829A）
20Hz～500kHz（TH2829B）
20Hz～1MHz （TH2829C）
Min. resolution：0.5mHz

6.2.2 Signal mode

Normal: When testing, on measurement display page, voltage across test terminals may be smaller than preset voltage.
Constant level: The auto adjustment of internal level makes the voltage of DUT accordant with preset voltage.

6.2.3 Test signal level

	Mode	Range	Accuracy	Resolution
Voltage	Normal constant level	$5mV_{RMS}$—$10V_{RMS}$ $10mV_{RMS}$—$5V_{RMS}$	±（10%×preset value+2mV） ±（6%×preset value+2mV）	100μV
Current	Normal constant current	$5OμA_{RMS}$ —$100mA_{RMS}$ $100μA_{RMS}$ —$50mA_{RMS}$	± (10%×preset value+ $10μA_{RMS}$) ± (6%×preset value+ $10μA_{RMS}$)	1μA

6.2.4 Output impedance

10Ω, 30Ω, 50Ω and 100Ω±2% are selectable.

6.2.5 Monitor for test signal level

Mode	Range	Accuracy
Voltage	$5mV_{RMS}$—$2V_{RMS}$ $0.01mV_{RMS}$—$5mV_{RMS}$	±（3%×reading+0.5mV） ±（12%×reading +0.1mV）
Current	$50μA_{RMS}$—$20mA_{RMS}$ $0.001μA_{RMS}$—$50μA_{RMS}$	±（3%×reading +5μA） ±（12%×reading +1μA）

6.2.6 Maximum measurement display range

Parameter	Measurement display range
L、Lk	0.00001μH ～ 99.9999kH
C	0.00001pF ～ 9.99999F
Z、R、X、DCR	0.00001Ω～ 99.9999MΩ
Y、B、G	0.00001μs ～ 99.9999S
D	0.00001 — 9.99999
Q	0.00001 — 99999.9
θ	Deg -179.999°～179.999° Rad -3.14159 ～ 3.14159

6.2.7 DC bias voltage source

0V— ± 10V Minimum resolution: 0.5mV, Accuracy: 1% x preset voltage+5mV
0mA—± 100mA Minimum resolution: 5μA

6.3 Measurement accuracy

Test accuracy includes stability、temperature coefficient、linear degree、test repeatability and calibration inter-error.
Check the accuracy of instrument should be under the following circumstances：

a. warm-up time：≥ 30 min
b. cable：0m, 1m
c. correct open and short correction after warming up
d. DC bias is in the position of "OFF"
e. The range works in "AUTO" to select correct test range

6.3.1 Accuracies of |Z|, |Y|, L, C, R, X, G, B

The accuracy Ae of |Z|, |Y|, L，C，R，X，G and B are expressed as：

$$\mathbf{A_e = \pm[A+(K_a+K_b+K_c)\times 100+ K_d + K_f]\times K_e\ [\%]}$$

A： basic test accuracy（figure A）
K_a：impedance rate factor（table A）
K_b：impedance rate factor（table A）
K_c：calibrated inter-factor（table B）
K_d：cable length factor（table D）
K_e：temperature factor（table E）
Kf：scan fixture modification factor（no add：Kf = 0, add：Kf = 0.2）
L, C, X, B accuracy using condition：D_x（Test value）≤0.1
R, G accuracy using condition：Q_x（Q test value）≤0.1

WhenD_x≥0.1, L, C, X, B accuracy factor A_e should be multiplied by $\sqrt{1+D_x^2}$

When Q_x≥0.1, R, G accuracy factor A_e should be multiplied by $\sqrt{1+Q_x^2}$
Accuracy of G can only be available in G-B combination

6.3.2 Accuracy of D

The accuracy of D is given by D_e：

$$D_e = \pm\frac{A_e}{100}$$

The formula is only available when D_x≤0.1.
When D_x>0.1，D_e should be multiplied by（1+D_x）

6.3.3 Accuracy of Q

The accuracy of Q is given by the formula below:

$$Q_e = \pm \frac{Q_x \times D_e}{1 \mp Q_x \times D_e}$$

Where, Q_x is the value of the tested Q.
D_e is the accuracy of D
Above formula should be used when $Q_x \times D_e < 1$.

6.3.4 Accuracy of θ

The accuracy of **θ** is given by the formula below:

$$\theta_e = \frac{180}{\pi} \times \frac{A_e}{100} \qquad [\text{deg}]$$

6.3.5 Accuracy of G

When D_x (tested value of D)≤0.1
The accuracy of G is given by the formula below:

$$G_e = B_x \times D_e \qquad [S]$$

$$B_x = 2\pi f C_x = \frac{1}{2\pi f L_x}$$

Where, B_x is the value of tested B with the unit [S].
C_x is the value of tested C with the unit [F].
L_x is the value of tested L with the unit [H].
D_e is the accuracy of D.
F is test frequency.
The accuracy of G is only available in C_p-G and L_p-G combination

6.3.6 Accuracy of Rp

when D_x（value of tested D）≤0.1
The accuracy of R_p is given by the formula below:

$$R_p = \pm \frac{R_{px} \times D_e}{D_x \mp D_e} \qquad [\Omega]$$

Where, R_{px} is the value of tested R_p with the unit [S].
D_x is the value of test D with the unit [F].
D_e is the accuracy of D.

6.3.7 The accuracy of Rs

when D_x（value of tested D）≤0.1
The accuracy of R_s is given by the formula below：

$$R_{se} = X_x \times D_e \qquad [\Omega]$$

$$X_x = 2\pi fL_x = \frac{1}{2\pi f C_x}$$

Where, X_x is the value of test X with the unit [S].
C_x is the value of test C with the unit [F].
L_x is the value of test L with the unit [H].
D_e is the accuracy of D
F is test frequency

6.3.8 Accuracy factor

Figure A shows the basic measurement accuracy A.

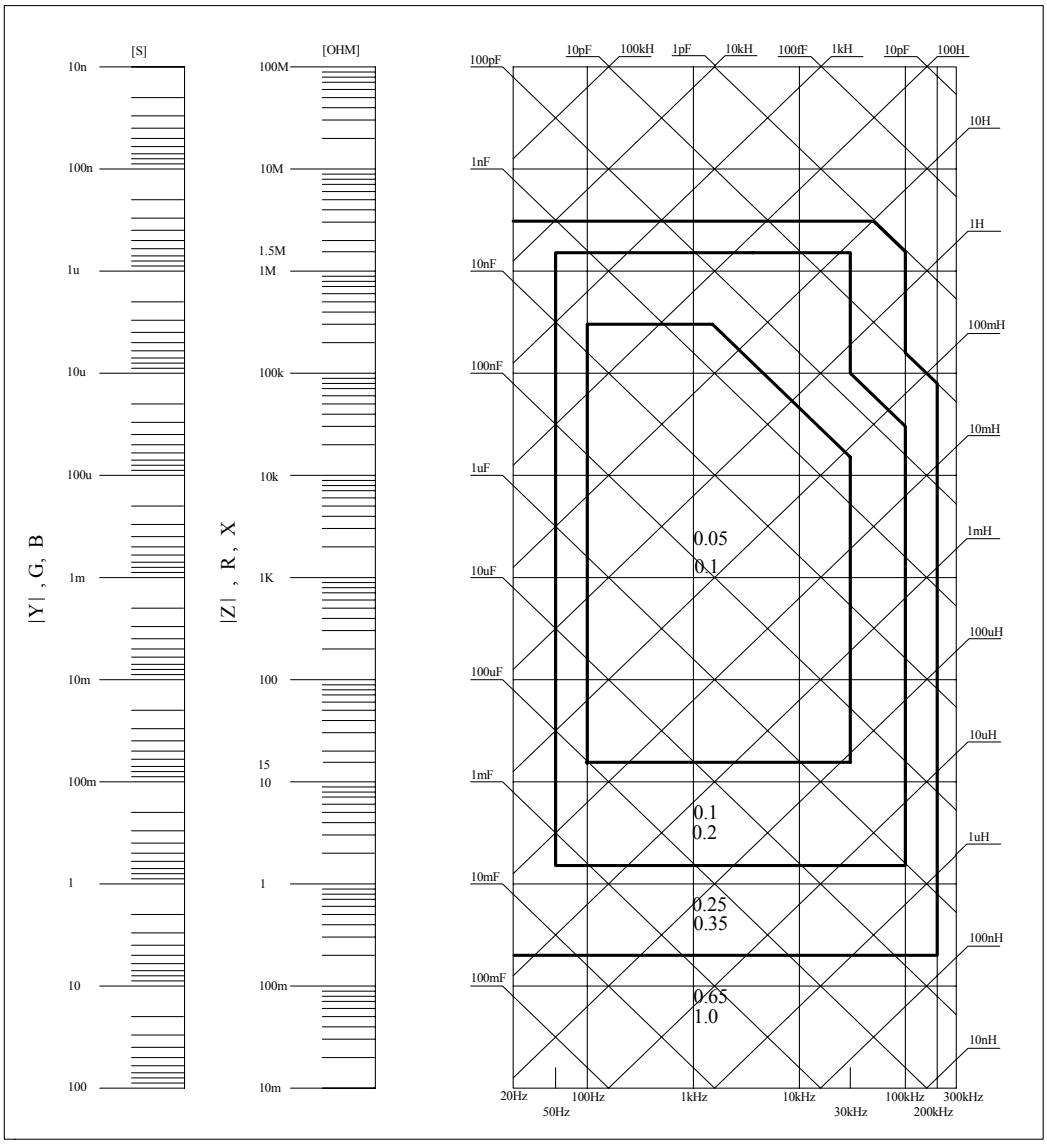

In figure A, select a smaller value on boundary line.

(This figure is the basic accuracy for 2829A. The basic accuracy for 2829B 300kHz-500kHz is about thousandth, while the basic accuracy for 2829C 500kHz-1MHz is about hundredth)

In this figure, the basic accuracy value A can be obtained by the following methods:

0.1---When $0.4V_{rms} \leq V_s \leq 1.2V_{rms}$, the test speed is the value A of medium, slow and fast.

0.1---When $0.4V_{rms} \leq V_s \leq 1.2V_{rms}$, the test speed is the value A.

When $V_s < 0.4V_{rms}$ or $V_s > 1.2V_{rms}$, the calculation method of value A is as the following steps:

1. Obtain A according to the current measurement speed;
2. According to the current test signal voltage to select the accuracy modification coefficient A_r (refer to figure B), the current basic

measurement accuracy A is obtained by multiplying A got in step 1 with A_r.

Figure B is the basic accuracy modification curve, where V_s is the test signal voltage.

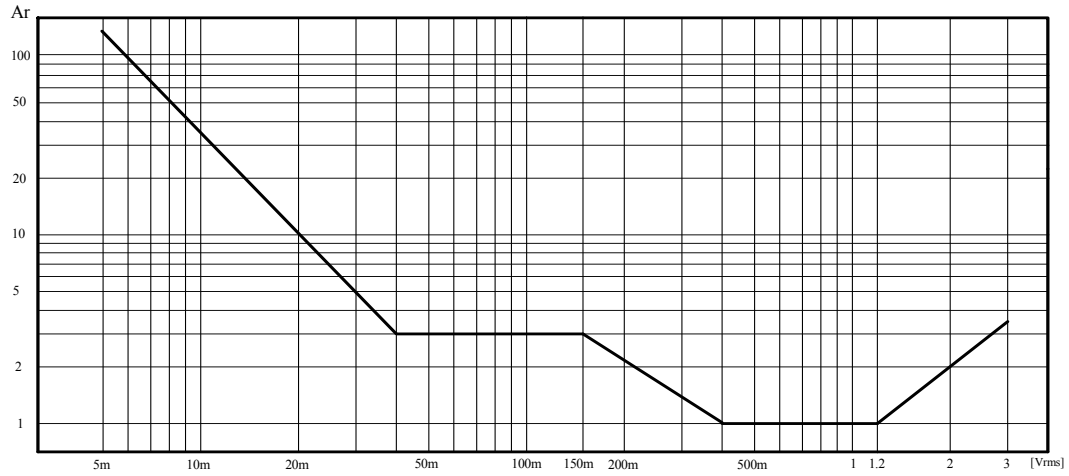

Table A Impedance rate factors: K_a, K_b

Speed	Frequency	K_a	K_b
Medium Slow	f_m<100Hz	$(\frac{1\times10^{-3}}{\lvert Z_m\rvert})(1+\frac{200}{V_s})(1+\sqrt{\frac{100}{f_m}})$	$\lvert Z_m\rvert(1\times10^{-9})(1+\frac{70}{V_s})(1+\sqrt{\frac{100}{f_m}})$
	100Hz≤f_m ≤100kHz	$(\frac{1\times10^{-3}}{\lvert Z_m\rvert})(1+\frac{200}{V_s})$	$\lvert Z_m\rvert(1\times10^{-9})(1+\frac{70}{V_s})$
	100kHz<f_m ≤200kHz	$(\frac{1\times10^{-3}}{\lvert Z_m\rvert})(2+\frac{200}{V_s})$	$\lvert Z_m\rvert(3\times10^{-9})(1+\frac{70}{V_s})$
Fast	f_m<100Hz	$(\frac{2.5\times10^{-3}}{\lvert Z_m\rvert})(1+\frac{400}{V_s})(1+\sqrt{\frac{100}{f_m}})$	$\lvert Z_m\rvert(2\times10^{-9})(1+\frac{100}{V_s})(1+\sqrt{\frac{100}{f_m}})$
	100Hz≤f_m ≤100kHz	$(\frac{2.5\times10^{-3}}{\lvert Z_m\rvert})(1+\frac{400}{V_s})$	$\lvert Z_m\rvert(2\times10^{-9})(1+\frac{100}{V_s})$
	100kHz<f_m ≤200kHz	$(\frac{2.5\times10^{-3}}{\lvert Z_m\rvert})(2+\frac{400}{V_s})$	$\lvert Z_m\rvert(6\times10^{-9})(1+\frac{100}{V_s})$

Where, f_m is the test frequency and the unit is [Hz].

The unit of the tested impedance is [Ω].

The unit of the test signal voltage is [mV_{rms}].

When the impedance is smaller than 500Ω, K_a, K_b is unavailable.

When the impedance is larger than 500Ω, K_b, K_a is unavailable.

Table B calibrated interpolating factor K_C

Test frequency	K_c
Direct calibrated frequency	0
Other frequency	0.0003

Table C Direct Calibrated frequency

			20	25	30	40	50	60	80	[Hz]
100	120	150	200	250	300	400	500	600	800	[Hz]
1	1.2	1.5	2	2.5	3	4	5	6	8	[kHz]
10	12	15	20	25	30	40	50	60	80	[kHz]
100	120	150	200	250	300					[kHz]

There are 43 frequencies in table C.

Table D Cable length factor K_d

Test signal level	Cable length		
	0m	1m	2m
≤1.5V_{rms}	0	2.5×10^{-4}（1+50×f_m）	5×10^{-4}（1+50×f_m）
>1.5V_{rms}	0	2.5×10^{-3}（1+16×f_m）	5×10^{-3}（1+50×f_m）
f_m: test frequency [MHz]			

When using the scan jig, take the correction factor K_d when the cable length is 2m.

Table E Temperature factor K_e

Temperature (℃)	5	8	18	28	38
K_e	6	4	2	1	2	4

6.3.9 Accuracy of DCR

A (1+R_x/5MΩ+16mΩ/R_x)[%] ±0.2mΩ
When the instrument is in Middle and slow speed, A=0.25
In Fast speed, A=0.5
Where, R_x is the tested resistance.

6.3.10 Accuracy of leakage inductance Lk

Inductance L's accuracy +0.2%

6.4 Safety requirement

The instrument is the Ⅰ class safety instrument.

6.4.1 Insulation resistance

Under reference working condition，the insulation resistance between power terminal and instrument jacket should not be smaller than50MΩ.
Under humility condition, the insulation resistance between voltage terminal and instrument jacket should not be smaller than 2 MΩ.

6.4.2 Insulation intensity

Under reference working condition, the insulation between the power terminal and the instrument jacket should bear an AC voltage (50Hz frequency and 1.5kV rated voltage) for 1 minute and there is no breakdown and flashover.

6.4.3 Leakage current

The leakage current should not be larger than 3.5mA (AC effective value).

6.5 Electromagnetic compatibility

- Transient sensitivity, based on the requirement of GB6833.4.
- Conductive sensibility, based on the requirement of GB6833.6.
- Radiated interference, based on the requirement of GB6833.10.

6.6 Performance test

6.6.1 Working condition

All tests should be performed under the working condition listed in Chapter 1. In this part, only the main indexes are listed. Users can make test under the specified condition mentioned in this manual. Performance test can be worked in the warm up conditions discussed in Chapter 1.

6.6.2 The used instruments and devices

No.	Instrument and Device		Specification
1	Standard capacitor	100pF	0.02% D is known
		1000pF	
		10000pF	
		10nF	
		0.1uF	

		1uF	
2	AC standard resistor	10Ω	0.02%
		100Ω	
		1kΩ	
		10kΩ	
		100kΩ	
3	DC standard resistor	0.1Ω	0.02%
		1Ω	
		10Ω	
		100Ω	
		1kΩ	
		10kΩ	
		100kΩ	
4	Standard inductor	100μH	0.02%
		1mH	
		10mH	
		100mH	
5	Frequency counter		(0～1000) MHz
6	Digital Multimeter		0.5%
7	Insulation resistance meter		500V 10 levels
8	Hipot Tester		0.25kW (0～500)V

6.6.3 Function check

Ensure function keys, displayer and terminal etc. can work normally.

6.6.4 Test signal level

Adjust multimeter in AC voltage range, where one test cable is connected to H_{CUR} and the other is connected to ground terminal. Change level as: 10mV, 20mV, 100mV, 200mV, 1V, 2V, the reading should meet the demand of test signal level in this chapter.

6.6.5 Frequency

Connect frequency meter to ground terminal. The test terminal of the frequency meter is connected with $H_{CUR.}$ Change the frequency as: 20Hz, 100Hz, 1kHz, 10kHz, 100kHz, 200kHz (TH2829A is 300kHz). The reading of frequency meter should meet the demand of the test signal frequency in this chapter.

6.6.6 Measurement accuracy

Basic parameters are R, L, C and D, so measurement accuracy is mainly about R, L, C and D.

6.6.7 Accuracy of C and D

Function	C_p-D				
Test frequency	100Hz	1kHz	10kHz	100kHz	Test respectively
Level	1V				
Range	AUTO				
Bias	0V				
Speed	Slow				

Open and short correction should be made before testing. Connect standard capacitors: 100pF, 1000pF, 10nF, 0.1uF, 1uF and change the frequency. The error capacitance C between reading and nominal value should be in the range ruled in this chapter, dissipation D should be in the range ruled in this chapter.

6.6.8 Accuracy of L

Test condition:

Function	L_s-Q				
Test frequency	100Hz	1kHz	10kHz	100kHz	Test respectively
Level	1V				
Range	AUTO				
Bias	0V				
Speed	Slow				

Open and short correction should be made before testing. Connect standard inductors: 100μH, 1mH, 10mH, 100mH and change the frequency. The error between reading and nominal value should be in the range ruled in this chapter.

6.6.9 Accuracy of Z

Test condition:

Function	Z-θ				
Test frequency	100Hz	1kHz	10kHz	100kHz	Test respectively
Level	1V				
Range	AUTO				
Bias	0V				
Speed	Slow				

Open and short correction should be made before testing. Connect standard AC resistors: 10Ω, 100Ω, 1kΩ, 10kΩ, 100kΩ and change the frequency. The error between reading and nominal value should be in the range ruled in this chapter.

6.6.10 Accuracy of DCR

Test condition

Function	DCR
Test frequency	-----
Level	-----
Range	AUTO
Bias	-----
Speed	Slow

Short correction should be made before testing. Connect standard DC resistors: 0.1Ω, 1Ω, 10Ω, 100Ω, 1kΩ, 10kΩ, 100kΩ. The error between reading and nominal value should be in the range ruled in this chapter.

Chapter 7 Command Reference

The signs in this manual are as follows:
NR1: integer, e.g.:123
NR2: fix-point number, e.g.: 12.3
NR3: floating-point number, e.g.: 12.3E+5
NL: carriage key, ASCII code: 10
^END: EOI signal in IEEE-488

7.1 Subsystem commands for TH2829

- DISPlay
- FREQuency
- VOLTage
- CURRent
- AMPLitude
- Output RESister
- OUTPut
- BIAS
- FUNCtion
- LIST
- APERture
- TRIGger
- FETCh?
- CORRection
- COMParator
- Mass MEMory

7.1.1 DISPlay subsystem commands

DISPlay subsystem commands are mainly used to set the display page for the instrument. The :DISPlay? Query returns the current page.
Command tree:

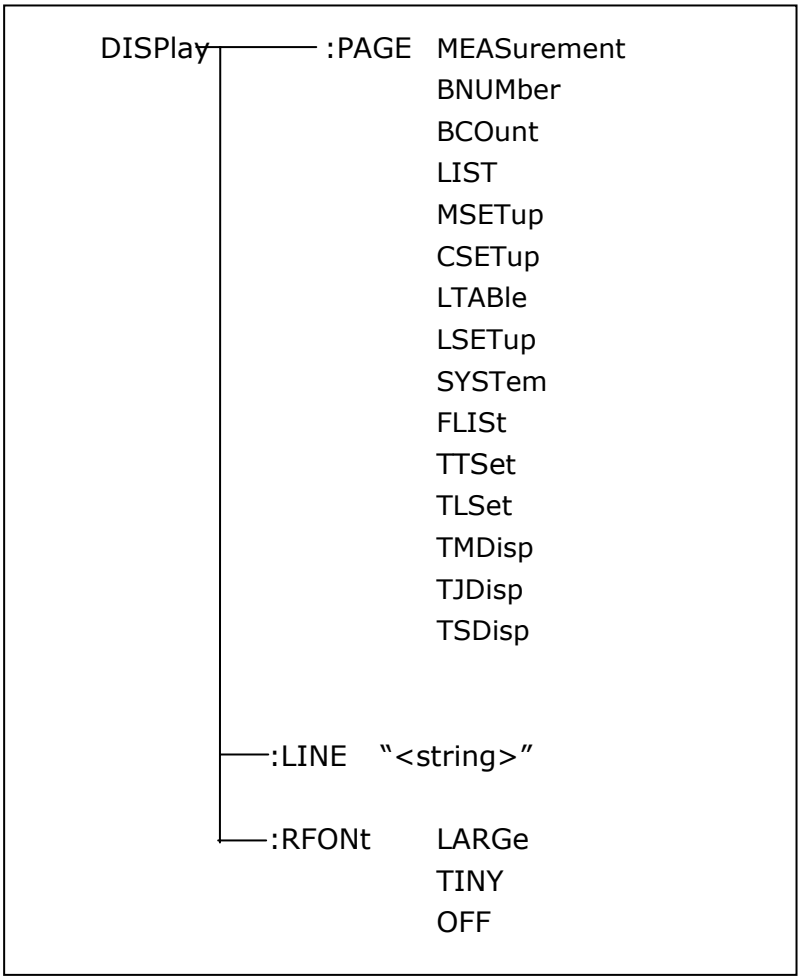

The :PAGE command sets the display page.
The :DISPlay:PAGE? query returns the current page.
Command syntax: DISPlay:PAGE<page name>
<Page name> can be set as the following items:

MEASurement	Set the display page as the LCR measurement display.
BNUMber	Set the display page as the bin number display.
BCOunt	Set the display page as the bin count display.
LIST	Set the display page as the list sweep display.
MSETup	Set the display page as the measurement display.
CSETup	Set the display page as the correction setup.
LTABle	Set the display page as the limit table setup.
LSETup	Set the display page as the list sweep setup.
SYSTem	Set the display page as the system setup page.
FLISt	Set the display page as the file list page.

For example: WrtCmd("DISP:PAGE MEAS"), Set the display page as the LCR measurement display page.

Query syntax: DISPlay:PAGE?
Return format: <page name><NL^END>

<page name> can be set as the following items:

<LCR MEAS DISP>	The current page is the LCR measurement display page.
<BIN No. DISP>	The current page is the bin number display page.
<BIN COUNT DISP>	The current page is the bin count display page.
<LIST SWEEP DISP>	The current page is the list sweep display page.
<MEAS SETUP>	The current page is the measurement setup page.
<CORRECTION>	The current page is the correction page.
<LIMIT TABLE SETUP>	The current page is the limit table setup page.
<LIST SWEEP SETUP>	The current page is the list sweep setup page.
<SYSTEM SETUP>	The current page is the system setup page.
<FILE LIST>	The current page is the file list page.

The :LINE command is used to set the current measurement item which can be a substring with up to 16 characters. The :LINE? query returns the current measurement item. The character string of the measurement item can be used as the file name when saving a file.
Command syntax: DISPlay:LINE”<string>”
Where,
<string> can be an ASCII character string (maximum number is 16).
For example: WrtCmd(“DISP:LINE” Resistor meas””)
Query syntax: DISPlay:LINE?
Return format: <string><NL^END>

The :ResultFONt command is used to set the current font of the measurement result. The :ResultFONt? Query returns the current font of the measurement result.
Command syntax: DISPlay:RFONt <font>
<font> can be the following information:
LARGe: Use large character to display the measurement result, 12ms/meas.
TINY: Use tiny character to display the measurement result, 5ms/meas.
OFF: Measurement result will not be displayed but can be read from the bus.
Query syntax: DISPlay:FRONt?
Return format: <font><NL^END>
<font> can be the following information:
LARGE
TINY
OFF

7.1.2 FREQuency subsystem commands

The FREQuency subsystem commands are mainly used to set the measurement frequency of the instrument. The :FREQuency query returns the current measurement frequency.

Command syntax: FREQuency { <value> | MIN | MAX }

Where,

<value> NR1, NR2 or NR3 data format followed by Hz, kHz, MHz.

MIN Set the measurement frequency as 20Hz.

MAX Set the measurement frequency as 200kHz (The maximum frequency of TH2829A is 300kHz)

For example: WrtCmd("FREQ 1KHZ") Set the frequency as 1000Hz.

Query syntax: FREQuency?

Return format: <NR3><NL^END>

7.1.3 VOLTage subsystem commands

The VOLTage subsystem commands are mainly used to set the measurement voltage. The VOLTage? query returns the current measurement voltage.

Command syntax:

VOLTage { <value> | MIN | MAX }

Where,

<value> NR1, NR2 or NR3 data format followed by V.

MIN Set the measurement voltage as 5mV.

MAX Set the measurement voltage as 2V.

For example: WrtCmd("VOLT 1V") Set the measurement voltage as 1V.

Query syntax: VOLTage?

Return format: <NR3><NL^END>

7.1.4 CURRent subsystem commands

The CURRent subsystem commands are mainly used to set the measurement current. The CURRent? query returns the current measurement current.

Command syntax:

CURRent { <value> | MIN | MAX }

Where,

<value> NR1, NR2 or NR3 data format followed by MA.

MIN Set the measurement current as 50μA.

MAX Set the measurement current as 20mA.

For example: WrtCmd ("CURR 10MA") Set the measurement current as 10mA.

Query syntax: CURRent?
Return format:<NR3><NL^END>

7.1.5 AMPLitude subsystem commands

The :AMPLitude subsystem commands are mainly used to set the auto level control (ALC) function as ON or OFF. The :AMPLiture? query returns the current status of the ALC function.
Command systax:

AMPLitude:ALX { ON | OFF | 1 | 0 }

Where,

Character 1 (49) is equal to ON.
Character 0 (48) is equal to OFF.

For example: WrtCmd ("AMPL:ALC 0") Set the ALC function as OFF.

Query syntax: AMPLitude:ALC?
Return format: <NR1><NL^END>

7.1.6 Output RESister subsystem commands

The Output RESister subsystem commands are mainly used to set the output internal resistor mode. The Output RESister? query returns the current output internal resistance status.
Command syntax:

ORESister { 30 | 50 | 100 | 10CC }

For example: WrtCmd ("ORES 30") Set the output internal resistance is 30 OHM.

Query syntax: ORESister?
Return format: <NR1><NL^END>

7.1.7 OUTPut subsystem commands

The OUTPut subsystem commands are mainly used to set the status of the 1A DC bias source and DC isolation function.

Command tree:

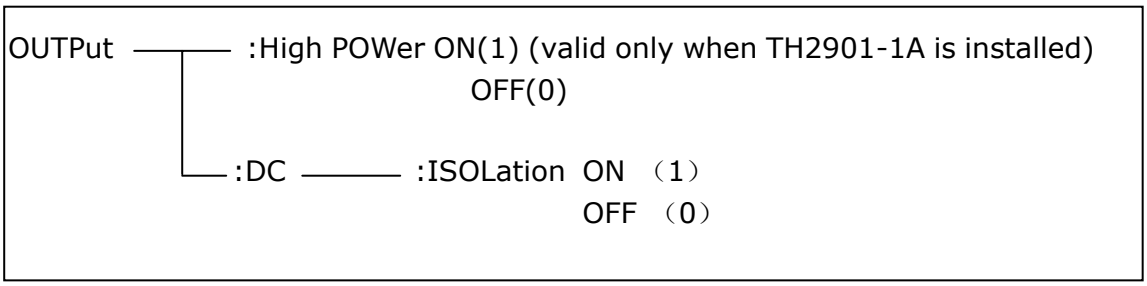

The :HPOWer command is used to set the 1A DC bias source as ON or OFF. The :HPOWer? query returns the current status of the 1A DC bias source. Before using this command, please ensure the option component 1A DC bias source has been installed.

Command syntax:

OUTPut:HPOWer { ON | OFF | 1 | 0 }

Where,

Character 1 (49) is equal to ON.
Character 0 (48) is equal to OFF.

Query syntax: OUTPut:HPOWer?
Return format: <INT><NL^END> or <OPT1><NL^END>, OPT means the 1A DC bias source is used, or unused.

The :DC:ISOLation command is used to set the DC isolation function of the 100mA/10V DC bias source as ON or OFF. The :DC:ISOLation? query returns the current status of the DC isolation function.

Command syntax:

OUTPut:DC:ISOLation { ON | OFF | 1 | 0 }

Where,

Character 1 (49) is equal to ON.
Character 0 (48) is equal to OFF.

Query syntax: OUTPut:DC:ISOLation?
Return format: <NR1><NL^END>

7.1.8 BIAS subsystem commands

The :BIAS subsystem commands are mainly used to set the internal bias voltage and the bias status.
Command tree:

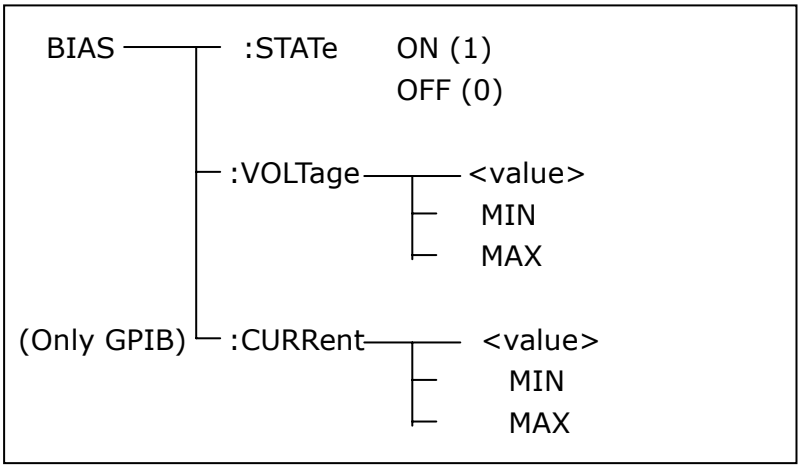

The BIAS:STATe command is used to set the bias status. The :STATe? query returns the current bias status.
Command syntax:

BIAS:STATe { ON | OFF | 1 | 0 }

Where,

Character 1 (49) is equal to ON.
Character 0 (48) is equal to OFF.

For example: WrtCmd ("BIAS:STATe 0") Set the DC bias function as OFF.

Query syntax: BIAS:STATe?
Return format: <NR1><NL^END>

The BIAS:VOLTage command is used to set the internal bias voltage. The BIAS:VOLTage? query returns the current bias voltage.
Command syntax:

BIAS:VOLTage { <value> | MIN | MAX }

Where,
<value> NR1, NR2 or NR3 data format.
MIN Set the bias voltage as 0V.

MAX Set the bias voltage as 10V.
For example: WrtCmd ("BIAS:VOLT MIN") Set the DC bias voltage as 0V.

Query syntax: BIAS:VOLTage?
Return format: <NR3><NL^END>

The BIAS:CURRent (only GPIB interface) command is used to set the external bias current. The BIAS:CURRent? query returns the bias current. The external bias current is controlled by serial interface, so only GPIB interface supports this command.
Command syntax:

BIAS:CURRent { <value> | MIN | MAX }

Where,
<value> NR1, NR2 or NR3 data format
MIN Set the bias current as 0A.
MAX Set the bias current as 10A.
For example: WrtCmd ("BIAS:CURR MIN") Set the DC bias current as 0A.

Query syntax: BIAS:CURRent?
Return format: <NR3><NL^END>

7.1.9 FUNCtion subsystem commands

The FUNCtion subsystem commands are mainly used to set measurement functions, range, current/voltage monitor ON/OFF, deviation display mode, nominal setting.
Command tree:

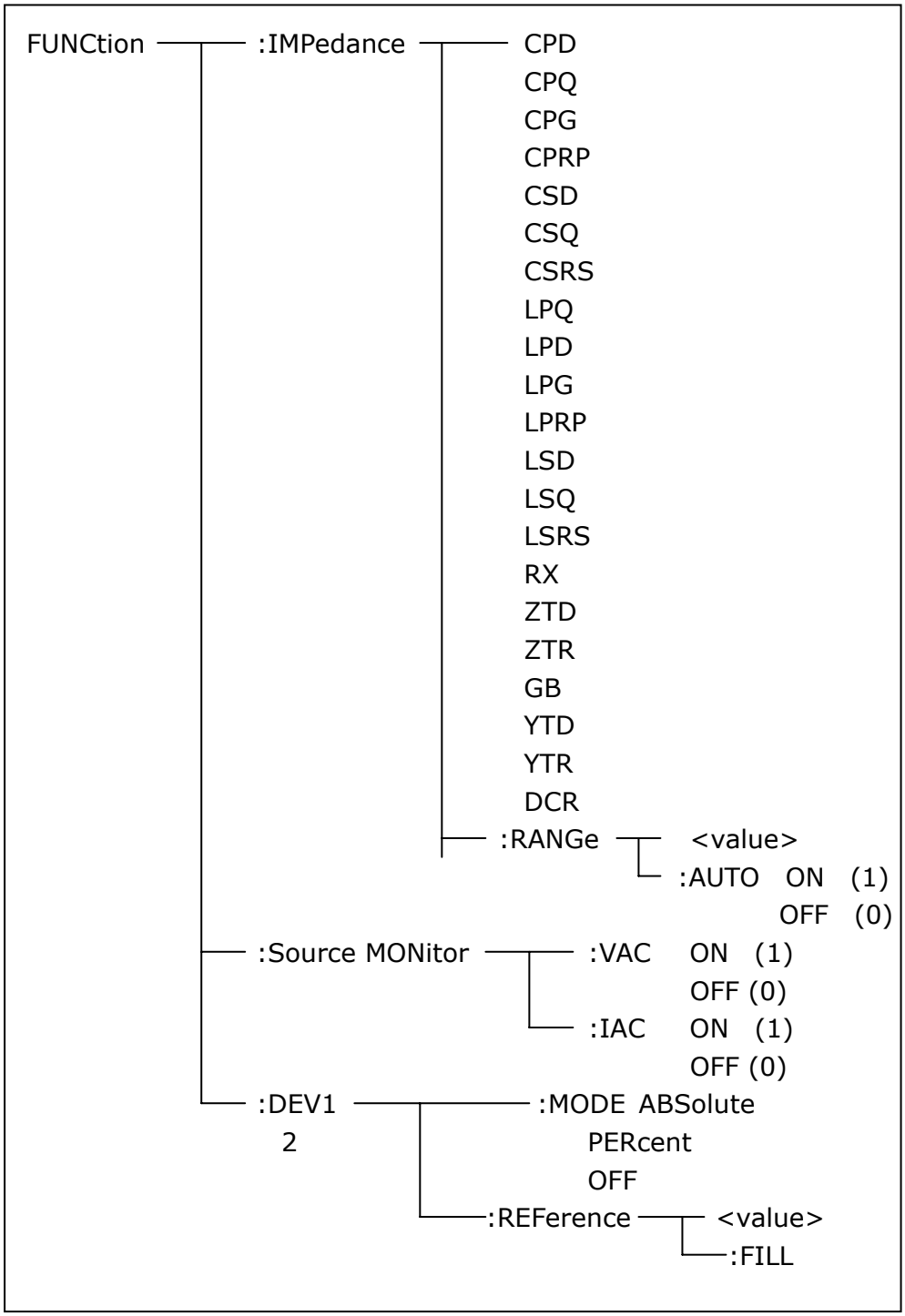

The FUNCtion:IMPedance command is used to set instrument functions. The FUNCtion:IMPedance? query returns the current function parameters.

Command syntax: FUNCtion:IMPedance <function>
<function> can be one of the following items.

CPD	Set the function as Cp-D	LPRP	Set the function as Lp-Rp
CPQ	Set the function as Cp-Q	LSD	Set the function as Ls-D

CPG	Set the function as Cp-G	LSQ	Set the function as Ls-Q
CPRP	Set the function as Cp-Rp	LSRS	Set the function as Ls-Rs
CSD	Set the function as Cs-D	RX	Set the function as R-X
CSQ	Set the function as Cs-Q	ZTD	Set the function as Z-θ°
CSRS	Set the function as Cs-Rs	ZTR	Set the function as Z-θr
LPQ	Set the function as Lp-Q	GB	Set the function as G-B
LPD	Set the funxtion as Lp-D	YTD	Set the function as Y-θ°
LPG	Set the function as Lp-G	YTR	Set the function as Y-θr

For example: WrtCmd ("FUNC:IMP RX") Set the function as R-X.

Query syntax: FUNCtion:IMPedance?
Return format: <function><NL^END>

The FUNCtion:IMPedance:RANGe command is used to set the range. The FUNCtion:IMPedance:RANGe? query returns the current range.
Command syntax: FUNCtion:IMPedance:RANGe <value>
Where, <value> can be the impedance of the DUT or NR1, NR2 or NR3 data format followed by OHM or KOHM.
For example: WrtCmd ("FUNC:IMP:RANG 1KOHM") Set the range as 1kOHM.

Query syntax: FUNCtion:IMPedance:RANGe?
Return format: <value><NL^END>
Where, <value> can be

10	30	100
300	1000	3000
10000	30000	100000

The FUNCtion:IMPedance:RANGe:AUTO command is used to set the automatic range selection status. The FUNCtion:IMPedance:RANGe:AUTO? query returns the current range status.
Command syntax:

FUNCtion:IMPedance:RANGe:AUTO { ON (1) / OFF (0) }

Where,

Character 1 (49) is equal to ON.

Character 0 (48) is equal to OFF.

For example: WrtCmd ("FUNC:IMP:RANG:AUTO ON") Set the automatic range as ON.

Query syntax: FUNCtion:IMPedance:RANGe:AUTO?
Return format: <NR1><NL^END>

The FUNCtion:Source MONitor:VAC command is used to set the voltage monitor ON or OFF. The FUNCTtion:Source MONitor:VAC? query returns the current

voltage monitor status.

FUNCtion:SMONitor:VAC { ON (1) / OFF (0) }

Where,

Character 1 (49) is equal to ON.

Character 0 (48) is equal to OFF.

For example: WrtCmd ("FUNC:SMON:VAC ON") Set the voltage monitor as ON.

Query syntax: FUNCtion:SMONitor:VAC?

Return format: <NR1><NL^END>

The FUNCtion:SMONitor:IAC command is used to set the current monitor as ON or OFF. The FUNCtion:SMONitor:IAC? query returns the current monitor status.

Command syntax:

FUNCtion:SMONitor:IAC { ON (1) / OFF (0) }

Where,

Character 1 (49) is equal to ON.

Character 0 (48) is equal to OFF.

For example: WrtCmd ("FUNC:SMON:IAC ON") Set the current monitor as ON.

Query syntax: FUNCtion:SMONitior:IAC?

Return format: <NR1><NL^END>

The FUNCtion:DEV<n>:MODE command is used to set the deviation measurement mode. The FUNCtion:DEV<n>:MODE? query returns the current deviation measurement mode.

Command syntax:

FUNCtion:DEV<n>:MODE { ABSolute / PERCent / OFF }

Where,

ABSolute Absolute value deviation display

PERCent Percent deviation display

OFF Real value display

Where, <n> is

Character 1 (49) is equal to the nominal value of primary parameter.

Character 2 (50) is equal to the nominal value of the secondary parameter.

For example: WrtCmd ("FUNC:DEV1:MODE ABS")

Query syntax: FUNCtion:DEV<n>:MODE?

Return format:

ABX
PERC } <NL^END>
OFF

The FUNCtion:DEV<n>:REFerence<value> command is used to set the nominal value of the deviation. The FUNCtion:DEV<n>:REFernece<value>? query returns the current nominal value of the deviation.
Command syntax: FUNCtion:DEV<n>:REFerence<value>
Where,
<value> is NR1, NR2 or NR3 data format.
<n> is
Character 1 (49) is equal to the nominal value of primary parameter.
Character 2 (50) is equal to the nominal value of the secondary parameter.
For example: WrtCmd ("FUNC:DEV1:REF 10")

Query syntax: FUNCtion:DEV<n>:REFerence?
Return format：<NR3><NL^END>

The FUNCtion:DEV<n>:REFerence:FILL command is used to set the nominal value of the deviation. This command directs the instrument to make a test and then copies the results of the primary and the secondary parameters as the nominal values of the deviation.
Command syntax: FUNCtion:DEV<n>:RERerence:FILL
Where,
Character 1 (49) or character 2 (50)is equal to the nominal values of the primary and secondary parameters.
For example: WrtCmd ("FUNC:DEV1:REF:FILL")

7.1.10 LIST subsystem commands

The LIST subsystem commands are mainly used to set the list sweep function, sweep points, sweep mode, sweep limits.
Command tree:

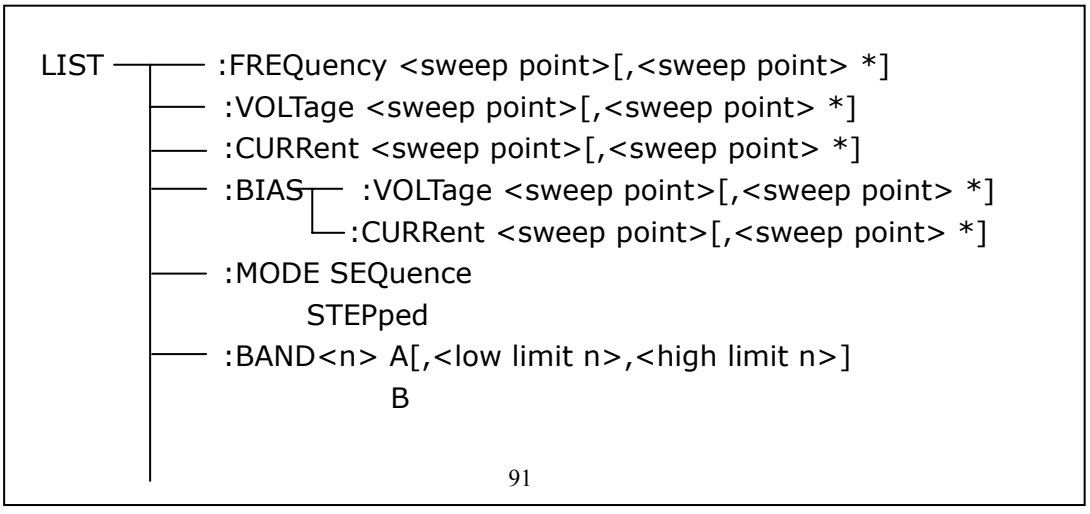

OFF

The LIST:FREQuency command is used to clear the original sweep points and set the frequencies of the sweep points. The LIST:FREQuency? query returns the current frequency of each sweep point.
Command syntax: LIST:FREQuency<value>[,<value>*]
NOTE: * part means 10 sweep points at most can be set.
Where,
<value> is NR1, NR2 or NR3 data format.
<value> should be set from 20HZ to 200KHZ, or return format will report errors.
For example: WrtCmd("LIST:FREQ 1E3, 2E3, 3E3, 4E3")
Set the frequency of the sweep point 1 as 1KHZ;
Set the frequency of the sweep point 2 as 2KHZ;
Set the frequency of the sweep point 3 as 3KHZ;
Set the frequency of the sweep point 4 as 4KHZ;
NOTE: HZ(hertz) is the suffix unit, MAHZ and MHZ is MHz (1E6 Hz).

Query syntax: LIST:FREQuency?
Return format: <NR3>, [,<NR3>*]<NL^END>

The LIST:VOLTage command is used to clear the original voltage of the each sweep point and reset the voltage. The LIST:VOLTage? query returns the current voltage of each sweep point.
Command syntax: LIST:VOLTage<value>[,<value>*]
NOTE: * part means 10 sweep points at most can be set.
Where,
<value> is NR1, NR2 or NR3 data format.
For example: WrtCmd ("LIST:VOLT 1.5") Set the frequency of the sweep point 1 as 1.5V.
WrtCmd ("LIST:VOLT 1E-2, 2E-2, 3E-2, 4E-2") Set the frequencies of sweep point 1, 2, 3 and 4 respectively as 10mV, 20mV, 30mV and 40mV.
NOTE: This command can be followed by suffix unit V.

Query syntax: LIST:VOLTage?
Return format:<NR3>[,<NR3>*]<NL^END>
<value> should be set from 5mV to 2V, or return format will report errors.

The LIST:CURRent command is used to clear the measurement current of each sweep point and reset the current. The LIST:CURRent? query returns the current of each sweep point.
Command syntax: LIST:CURRent<value>[,<value>*]

NOTE: * part means 10 sweep points at most can be set.

Where,

<value> is NR1, NR2 or NR3 data format.

For example: WrtCmd ("LIST:CURR 100MA") Set the measurement current of the sweep point 1 as 100mA.

WrtCmd ("LIST:CURR 1E-2, 2E-2, 3E-2, 4E-2") Set the currents of sweep points 1, 2,3 and 4 respectively as 10mA, 20mA, 3mA and 4mA.

NOTE: This command can be followed by a suffix unit A (ampere).

Query syntax: LIST:CURRent?

Return format: <NR3>[,<NR3>*]<NL^END>

NOTE: The current of each sweep point should be set from 50μA to 20mA, or return format will report errors.

The LIST:BIAS:VOLTage command is used to clear the original DC bias voltage of each sweep point and reset the voltage. The LIST:BIAS:VOLTage? query returns the current DC bias voltage of each sweep point.

Command syntax: LIST:BIAS:VOLTage<value>[,<value>*]

NOTE: * part means 10 sweep points at most can be set.

Where,

<value> is NR1, NR2 or NR3 data format.

For example: WrtCmd ("LIST:BIAS:VOLT 1.5V")

Set the DC bias voltage of sweep point 1 as 1.5V.

Query syntax: LIST:BIAS：VOLTage?

Return format: <NR3>[,<NR3>*]<NL^END>

The LIST:BIAS:CURRent command is used to clear the original DC bias current of each sweep point and reset them. The LIST:BIAS:CURRent? query returns the the DC bias current of each sweep point.

Command syntax: LIST:BIAS:CURRent<value>[,<value>*]

NOTE: * part means 10 sweep points at most can be set.

Where,

<value> is NR1, NR2 or NR3 data format.

For example: WrtCmd ("LIST:BIAS:CURR 100MA") Set the DC bias current of the sweep point 1 as 100mA.

WrtCmd ("LIST:BIAS:CURR 1E-2, 2E-2, 3E-2,4E-2") Set the DC bias currents of sweep points 1, 2, 3 and 4 respectively as 10mA, 20mA, 30mA and 40mA.

Query syntax: LIST:BIAS:CURRent?

Return format: <NR3>[,<NR3>*]<NL^END>

NOTE: TH2829 series instrument has installed a 10V/100mA internal DC

bias current source. If 1A DC source is required, please install an external source. TH2829 can be used with TH1773 DC Bias Source (providing DC current from 0 to 10A and can be bought from our company).

The LIST:MODE command is used to set the list sweep mode. The LIST:MODE? query returns the current list sweep mode.
Command syntax:

LIST:MODE { SEQuence | STEPped }

Where,

SEQuence means sequential mode.

STEPped means single step mode.

For example: WrtCmd ("LIST:MODE SEQ")

Query syntax: LIST:MODE?
Return format:

{ SEQ | STEP } <NL^END>

The LIST:BAND<n> command is used to set the limits of list sweep table. The LIST:BAND<n>? query returns the current limits.
Command syntax: LIST:BAND<n><parameter>[,<low limit n>,<high limit n>]
Where,

<n> 1 to 10 (NR1 format): sweep points on the n_{th} line

<parameter> A Compare the primary parameter of the test results with the high and the low limits.

B Compare the secondary parameter of the test results with the high and the low limits.

OFF No comparison

<low limit n> NR1, NR2 or NR3 data format, low limit of the sweep point on the n_{th} line.

<high limit n> NR1, NR2 or NR3 data format, high limit of the sweep point on the n_{th} line.

For example: WrtCmd ("LIST:BAND1 A, 10, 20")
WrtCmd ("LIST:BAND3 OFF")

Query syntax: LIST:BAND<n>?
Return Format: <parameter>,<low limit n>,<high limit n>

7.1.11 APERture subsystem commands

The APERture subsystem commands are mainly used to set the measurement speed, average times used in measurement. The APERture? query returns the

current measurement speed, average times.
Command syntax:

APERture { FAST | MEDium | SLOW } [,<value>]

Where,
FAST: 30 times/sec
MEDium: 10 times/sec
SLOW: 2 times/sec
<value> 1 to 255 in NR1
For example: WrtCmd ("APER MED, 55")

Query syntax: APERture?
Return format:

{ FAST | MED | SLOW } , <NR1><NL^END>

7.1.12 TRIGger subsystem commands

The TRIGger subsystem commands are mainly used to set the instrument trigger source, trigger delay and trigger measurement.
Command tree:

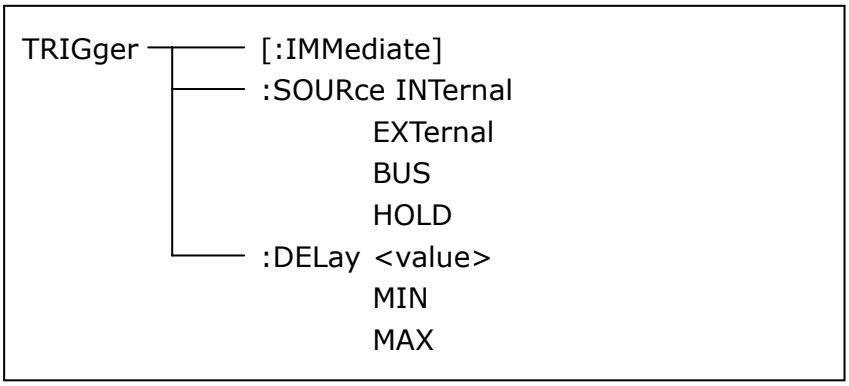

The TRIGger[:IMMediate] command is used to trigger a test.
Command syntax: TRIGger[:IMMediate]
For example: WrtCmd("TRIG")

The TRIGger:SOURce command is used to set the trigger source mode. The TRIGger:SOURce? query returns the current trigger source mode.
Command syntax:

TRIGger:SOURce { INTernal | EXTternal }

BUS
HOLD

Where,

INTernal The default trigger mode.
EXTernal Triggered by HANDLER interface.
BUS Triggered by RS232C interface or GPIB interface
HOLD Triggered by pressing TRIGGER.

For example: WrtCmd ("TRIG:SOUR BUS")

Query syntax: TRIGger:SOURce?
Return format:

{ INT / EXT / BUS / HOLD } <NL^END>

The TRIGger:DELay command is used to set the delay time after triggering. The TRIGger:DELay? query returns the current delay time.
Command syntax:

TRIGger:DELay { <value> / MIN / MAX }

Where,

<value> In NR1, NR2 or NR3 data format, from 0 to 60s with 1ms as the resolution.
MIN Set the delay time as 0s.
MAX Set the delay time as 60s.
For example: WrtCmd ("TRIG:DEL 5s") Set the delay time as 5s.

Query syntax: TRIGger:DELay?
Return format: <NR3><NL^END>

7.1.13 FETCh? subsystem commands

The FETCh? subsystem commands are mainly used to direct TH2829 to input a measurement result.
Command tree:

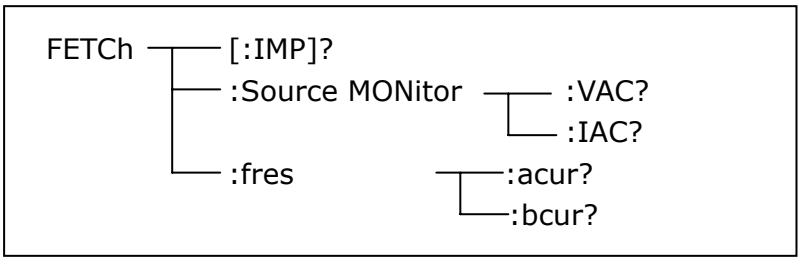

The FETCh[:IMP]? query directs TH2829 to input the last measurement result to the output buffer zone.
Query syntax: FETCh[:IMP]?
For example: WrtCmd ("TRIG:SOUR BUS")
WrtCmd ("TRIG")
WrtCmd ("FETC?")

TH2829 applies ASCII to delivery result, details are follows.
On measurement display page, bin NO. display page, bin count display page, ASCII data output format are described as below:

SN.NNNNNESNN	,	SN.NNNNNESNN	,	SN	,	SN or SNN	NL^END
<DATA A>		<DATA B>		<Status>		<BIN number>	

Where,
<DATA A>, <DATA B> format: <DATA A> (primary measurement data), <DATA B> (secondary measurement data)
12-digits ASCII format are as below:
SN.NNNNNESNN
(S:+/-,N: from 0 to 9, E: Exponent Sign)

Status	Description
-1	(In data buffer memory) no data
0	Common measurement data
+1	Analog LCR unbalance
+2	A/D converter is not working.
+3	Signal source is over loading.
+4	Constant voltage cannot be adjusted.

<status> format: When above measurement data is used, <status> data will display measurement status.

The output format of the <Status> display data uses 2-digits ASCII: SN (S: +/-, N: from 0 to 4)
NOTE: When <status> is -1, +1 or +2, the measurement data is 9.99999E37. When <status> is 0, +3 or +4, the real measurement data is beyond the limits.

Data	Sort result
0	Out of tolerance
+1	Bin 1
+2	Bin 2
+3	Bin 3
+4	Bin 4
+5	Bin 5
+6	Bin 6

+7	Bin 7
+8	Bin 8
+9	Bin 9
+10	Auxiliary bin

<Bin No.> format: The data displays the sorting results of the displayed bin, shown as above.
Only when the instrument compare function is set as ON, <bin No.> data can be displayed.
The output format of <bin No.> data applies 2 to 3 digits ASCII: SN or SNN (S: +/_, N: from 0 to 9).

On list sweep display page, the ASCII data output format is shown as below, that is, the return-circuit replaces sweep point number.

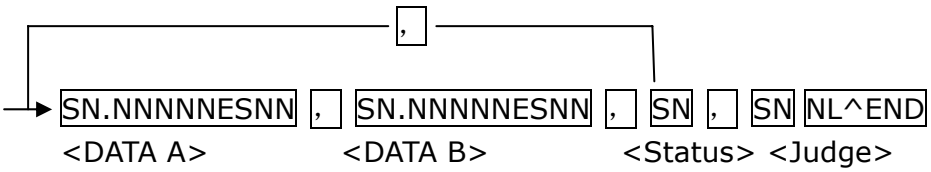

Figure 6 ASCII format 2 (list sweep)

Where,
Descriptions for <DATA A>, <DATA B>, <Status> are the same described before.
<Judge> format is as below:
<Input/Output> format: The data displays the compare result of the list sweep..

Data	Result
-1	low
0	pass
+1	high

When the compare function of the list sweep measurement is turned off, the output result of <Input/Output> is 0.
<Input/Output> data output format applies 2-digits ASCII format: SN (S: +/_, N: from 0 to 1)

7.1.14 CORRection subsystem commands

The CORRection subsystem commands are mainly used to set the correction function, OPEN, SHORT, LOAD.
Command tree:

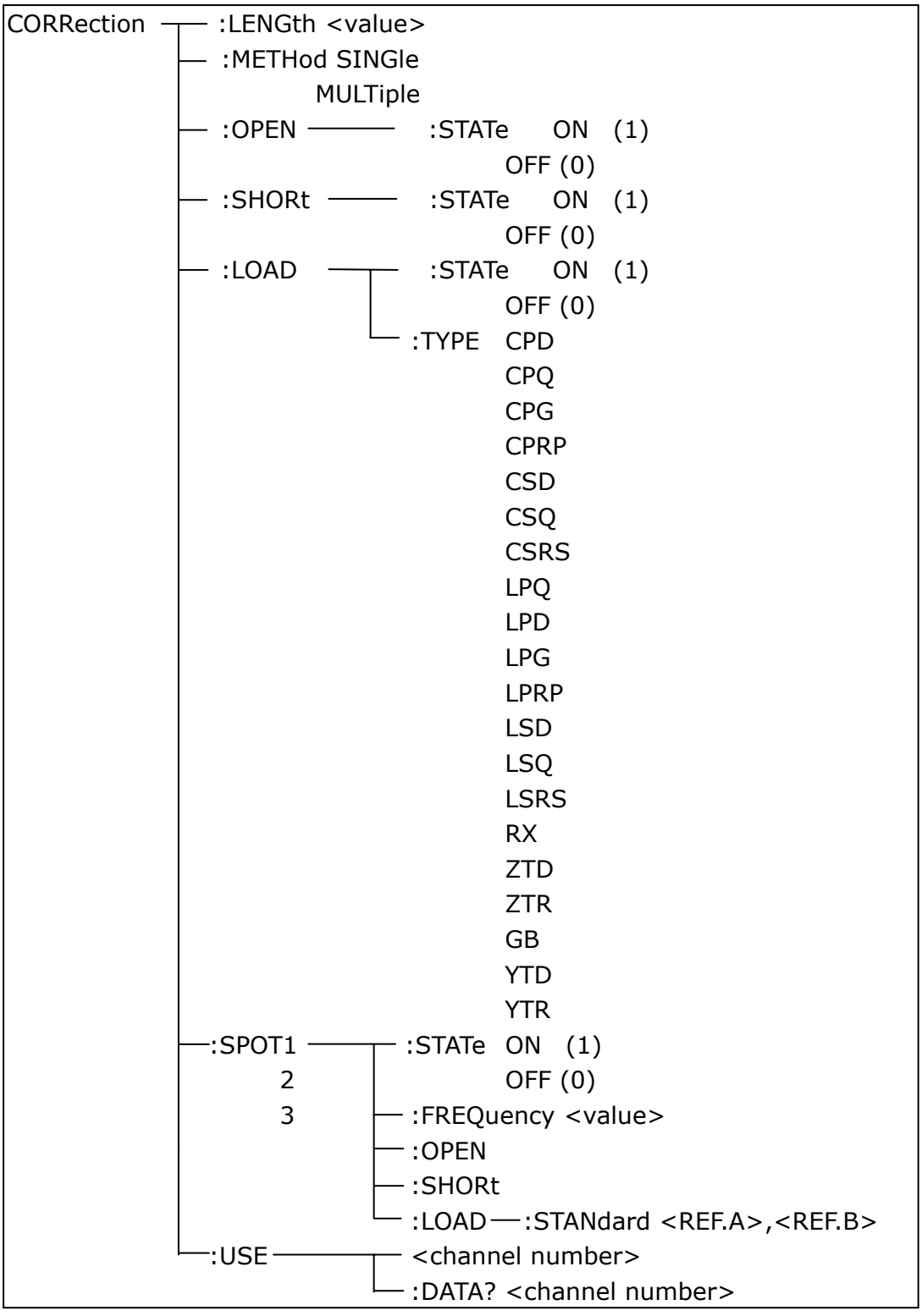

The CORRection:LENGth command is used to set the correction cable length. The CORRection:LENGth? query returns the current set cable length.

Command syntax: CORRection:LENGth<value>

Where,

<value> is 0, 1, 2 or 4 followed by M.

For example: WrtCmd ("CORR:LENG 1M") Set the cable length as 1 meter.

Query syntax: CORRection:LENGth?
Return format: <NR1><NL^END>

The CORReciton:METHod command is used to set the correction mode. The CORRection:METHod? query returns the current correction mode.
Command syntax: CORRection:METHod { SINGle | MULTi }
Where,
SINGle Set or return single channel mode.
MULTi Set or return multi channel mode.
For example: WrtCmd ("CORR:METH MULT") Set the instrument as multi channel mode.
Query syntax: CORRection:METHod?
Return format: { SINGle | MULTi } <NL^END>

The CORReciton:OPEN command is used to execute open correction for 43 preset test points (TH2829A has 41 preset test points).
Command syntax: CORRection:OPEN
For example: WrtCmd ("CORR:OPEN")

The CORRection:OPEN:STATe command is used to set the open correction ON or OFF. The CORReciton：OPEN:STATe? query returns the current open correction status.
Command syntax:
CORRction:OPEN:STATe { ON | OFF | 1 | 0 }
Where,
1 (decimal 49) is equal to ON.
0 (decimal 48) is equal to OFF.
For example: WrtCmd ("CORR:OPEN: STAT ON")

Query syntax: CORRection:OPEN:STATe?
Return format: <NR1><NL^END>

The CORRection:SHORt command is used to execute short correction for 43 preset test points (TH2829A has 41 preset test points).

Command syntax: CORRection:SHORt
For example: WrtCmd ("CORR:SHOR")

The CORRection:SHORt:STATe command is used to set the short correction status. The CORRection:SHORt:STATe? query returns the current short correction status.
Command syntax:

CORRection:SHORt:STATe { ON | OFF | 1 | 0 }

Where,
1 (decimal 49) is equal to ON.
0 (decimal 48) is equal to OFF.
For example: WrtCmd ("CORR:SHOR:STAT ON")

Query syntax: CORRection:SHORt:STATe?
Return format: <NR1><NL^END>

The CORRecition:LOAD:STATe command is used to set load correction. The CORRection:LOAD:STATe? query returns the current load correction status.
Command syntax:

CORRection:LOAD:STATe { ON | OFF | 1 | 0 }

Where,
1 (decimal 49) is equal to ON.
0 (decimal 48) is equal to OFF.
For example: WrtCmd ("CORR:LOAD:STAT ON")

Query syntax: CORRection:LOAD:STATe?
Return format: <NR1><NL^END>

The CORRection:LOAD:TYPE command is used to set the tested parameter type. The CORRection:LOAD:TYPE query returns the current parameter type.
Details of function are as follows:

CPD	Set the function as Cp-D	LPRP	Set the function as Lp-Rp
CPQ	Set the function as Cp-Q	LSD	Set the function as Ls-D
CPG	Set the function as Cp-G	LSQ	Set the function as Ls-Q
CPRP	Set the function as Cp-Rp	LSRS	Set the function as Ls-Rs
CSD	Set the function as Cs-D	RX	Set the function as R-X
CSQ	Set the function as Cs-Q	ZTD	Set the function as Z-θ°
CSRS	Set the function as Cs-Rs	ZTR	Set the function as Z-θr
LPQ	Set the function as Lp-Q	GB	Set the function as G-B
LPD	Set the function as Lp-D	YTD	Set the function as Y-θ°
LPG	Set the function as Lp-G	YTR	Set the function as Y-θr

For example: WrtCmd ("CORR:LOAD:TYPE CPD")

Query syntax: CORRection:LOAD:TYPE?
Return format: <function><NL^END>

The CORRection:SPOT<n>:STATe command is used to set the state of some specific frequency spots. The CORRection:SPOT<n>:STATe query returns the current state of each frequency spot (FREQ 1, FREQ 2 or FREQ 3).
Command syntax:

CORRection:SPOT<n>:STATe { ON | OFF | 1 | 0 }

Where,
1 (decimal 49) is equal to ON.
0 (decimal 48) is equal to OFF.
<n>:
1 refers to frequency spot 1.
2 refers to frequency spot 2.
3 refers to frequency spot 3.
For example: WrtCmd ("CORR:SPOT1:STAT ON")

Query syntax: CORRection:SPTO<n>:STATe?
Return format: <NR1><NL^END>

The CORRection:SPOT<n>:FREQuency command is used to set the frequencies of frequency spots1, 2 and 3. The CORRection:SPOT<n> query returns the current frequency of specific frequency spot.
Command syntax: CORRection:SPOT<n>:FREQeuency<value>
Where,
<value> can be NR1, NR2 or NR3 data format followed by HZ, KHZ and MHZ.
<n>:
1 refers to frequency spot 1.
2 fefers to frequency spot 2.
3 refers to frequency spot 3.

For example: WrtCmd ("CORR:SPOT1:FREQ 2KHZ") Set the frequency of frequency spot 1 as 2KHZ.
NOTE: <value> should be ranged from 20HZ to 300KHZ (TH2829A), or return format will report errors.

Query syntax: CORRection:SPOT<n>:FREQuency?
Return format: <NR3><NL^END>

The CORRection:SPOT<n>:OPEN command is used to execute open correction

for specific frequency spots (frequency 1, frequency 2 and frequency 3).
Command syntax: CORRection:SPOT<n>:OPEN
Where,
<n>:
1 refers to frequency spot 1.
2 refers to frequency spot 2.
3 refers to frequency spot 3.
For example: WrtCmd ("CORR:SPOT1:OPEN") Execute open correction for frequency spot 1.

The CORRection:SPOT<n>:SHORt command is used to execute short correction for specific frequency spots (frequency 1, frequency 2 and frequency 3).
Command syntax: CORRection:SPOT<n>:SHORt
Where,
<n>:
1 refers to frequency spot 1.
2 refers to frequency spot 2.
3 refers to frequency spot 3.
For example: WrtCmd ("CORR:SPOT1:SHOR") Execute short correction for frequency spot 1.

The CORRection:SPOT<n>:LOAD:STANdard command is used to set the standard reference of specific frequency spots (frequency spot 1, frequency spot2 and frequency spot 3 which are taking load correction). The CORRection:SPOT<n>:LOAD:STANdard query returns the current standard reference of specific frequency spot.
Command syntax: CORRection:SPOT<n>:LOAD:STANdard <REF. A><REF. B>
Where,
<n>:
1 refers to frequency spot 1.
2 refers to frequency spot 2.
3 refers to frequency spot 3.
<REF. A> can be NR1, NR2 or NR3 data format and taken as the standard reference of the primary parameter.
<REF. B> can be NR1, NR2 or NR3 data format and taken as the standard reference of the secondary parameter.
For example: WrtCmd ("CORR:SPOT1:LOAD:STAN 100.7, 0.0002")

Query syntax: CORRection:SPOT<n>:LOAD:STANdard?
Return format: <NR3><NL^END>

The CORRection:USE command is used to set the channel number of multi-channel correction. The CORRdction:USE? query returns the current used channel number.

Command syntax: CORRection:USE <channel number>
Where,
<channel number> ranges from 1 to 127 (NR1, NR2 or NR3 data format).
For example: WrtCmd ("CORR:USE 10") Set the channel number as 10.

Query syntax: CORRection:USE?
Return format: <channel number><NL^END>

The CORRection:USE:DTAT? query returns the OPEN/SHORT/LOAD correction measurement data of specific frequency spot 1, 2 or 3.
Command syntax: CORRection:USE:DATA?<channel number>
Where,
<channel number> ranges from 1 to 127 (NR1 format).
Return format:
<open1 A>,<open1 B>,<short1 A>,<short1 B>,<load1 A>,<load1 B>,
<open2 A>,<open2 B>,<short2 A>,<short2 B>,<load2 A>,<load2 B>,
<open3 A>,<open3 B>,<short3 A>,<short3 B>,<load3 A>,<load3 B>,
Where,
<open1/2/3 A> is NR3 data format and the primary open correction data at frequency spot 1/2/3.
<open1/2/3 B> is NR3 data format and the secondary open correction data at frequency spot 1/2/3.
<short 1/2/3 A> is NR3 data format and the primary short correction data at frequency spot 1/2/3.
<short 1/2/3 B> is NR3 data format and the secondary short correction data at frequency spot 1/2/3.
<load1/2/3 A> is NR3 data format and the primary load correction data at frequency spot 1/2/3.
<load1/2/3 B> is NR3 data format and the secondary load correction data at frequency spot 1/2/3.

7.1.15 COMParator subsystem commands

The COMParataor subsystem commands are used to set the bin comparator function including ON/OFF setting, Limit table setting.
Command tree:

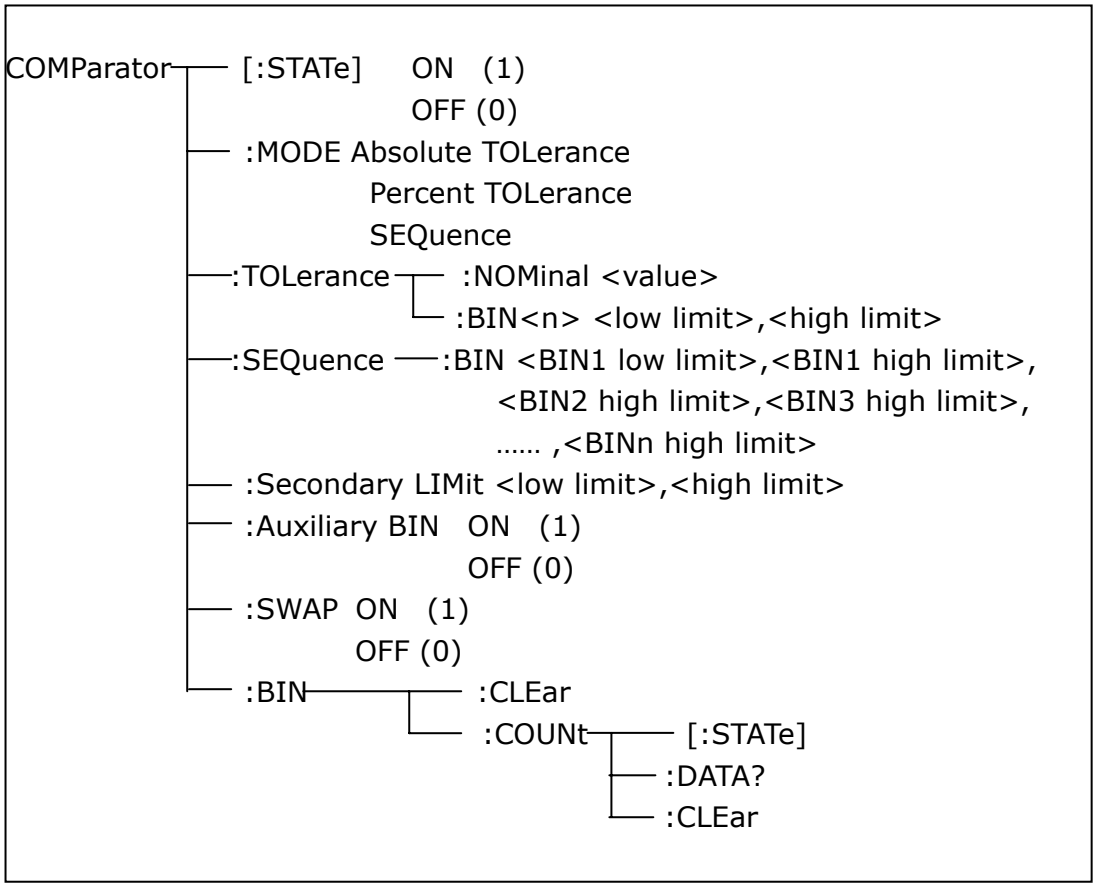

The COMParator[STATe] command is used to set the comparator function as ON or OFF. The COMParator[STATe]? query returns the current comparator state.
Command syntax:

COMParator[:STATe] { ON | OFF | 1 | 0 }

Where,
1 (decimal 49) is equal to ON.
0 (decimal 48) is equal to OFF.
For example: WrtCmd ("COMP ON")

Query syntax: COMParator[:STATe]?
Return format: <NR1><NL^END>.

The COMParator:MODE command is used to set the comparator mode. The COMParator:MODE? query returns the current mode.
Command syntax:

COMParator:MODE { ATOLerance | PTOLerance | SEQuence }

Where,
ATOLerance means absolute tolerance mode.
PTOLerance means proportional tolerance mode.
SEQuence means sequential tolerance mode.
For example: WrtCmd ("COM:MODE ATOL")

Query syntax: COMParator:MODE?
Return format: { ATOL | PTOL | SEQ } <NL^END>

The COMParator:TOLerance:NOMinal command is used to set the nominal value (this function is valid only when the limit mode is set as deviation mode). The COMParator:TOLerance:NOMinal? query returns the current nominal value.
Command syntax: COMParator:TOLerance:NOMinal<value>
Where,
<value> is a nominal value in NR1, NR2 or NR3 data format.
For example: WrtCmd ("COMP:TOL:NOM 100E-12")

Query syntax: COMParator:TOLerance:NOMinal?
Return format: <NR3><NL^END>

The COMParator:TOLerance:BIN<n> command is used to set the high and the low limits of each bin (this function is valid only when the limit mode is set as deviation mode). The COMParator:TOLeance:BIN<n>? query returns the current high and the low limits of each bin.

Command syntax: COMParatro:TOLerance:BIN<n><low limit><high limit>
Where,
<n> is the bin number from 1 to 9.
<low limit> is the low limit in NR1, NR2 or NR3 data format.
<high limit> is the high limit in NR1, NR2 or NR3 data format.
NOTE: The low limit should be smaller than the high limit, or error information will be reported.
For example: WrtCmd ("COMP:TOL:BIN1 -5,5")
WrtCmd ("COMP:TOL:BIN2 -10,10")

Query syntax: COMParator:TOLerance:BIN<n>?
Return format: <low limit><high limit><NL^END>

The COMParator:SEQuence:BIN command is used to set the high and the low

limits of sequential mode (this function is valid only when the limit mode is set as the sequential mode.). The COMParator:SEQuence:BIN? query returns the current high and the low limits of each bin.

Command syntax: COMParator:SEQuence:BIN <BIN1 low limit>, <BIN 1 high limit>, <BIN2 high limit>, …, <BINn high limit>
Where,
<BIN1 low limit> is the low limit of BIN 1 in NR1, NR2 or NR3 data format.
<BIN1 high limit> is the high limit of BIN1 in NR1, NR2 or NR3 data format.
<BINn high limit> is the high limit of BINn (the maximum of n is 9) in NR1, NR2 or NR3 data format.
NOTE: The low limit should be smaller than the high limit, or error information will be reported.
For example: WrtCmd ("COMP:SEQ:BIN 10, 20, 30, 40, 50")

Query syntax: COMParator:SEQuence:BIN?
Return format: <BIN1 low limit>, <BIN1 high limit>, <BIN2 high limit>, …, <BINn high limit><NL^END>

The COMParator:Secondary LIMit command is used to set the high and the low limits of the secondary parameter. The COMParator:Secondary LIMit query returns the current high and the low limits of the secondary parameter.
Command syntax: COMParator:SLIMit<low limit><high limit>
Where,
<low limit> is the low limit in NR1, NR2 or NR3 data format.
<high limit> is the high limit in NR1, NR2 or NR3 data format.
NOTE: The low limit should be smaller than the high limit, or error information will be reported.
For example: WrtCmd ("COMP:SLIM 0.001, 0.002")

Query syntax: COMParator:SLIMit?
Return format: <NR3>,<NR3><NL^END>

The COMParator:Auxiliary BIN command is used to set the auxiliary bin as ON or OFF. The COMParator:Auxiliary BIN? query returns the current auxiliary bin state.
Command syntax:

COMParator:Auxiliary BIN { ON | OFF | 1 | 0 }

Where,
1 (decimal 49) is equal to ON.
0 (decimal 48) is equal to OFF.
For example: WrtCmd ("COMP:ABIN ON")

Query syntax: COMParator:Auxiliary BIN?
Return format: <NR1><NL^END>

The COMParator:SWAP command is used to set the swap mode ON or OFF. For example: the original function parameter is Cp-D, after the SWAP mode is set as ON, the function parameter will be changed as D-Cp. In this case, the limits from BIN1 to BIN9 become the high and the low limits of D, the original secondary limits become that of Cp. That is to say, this function is to make swap comparison between the primary and the secondary parameters. On the contrary, If OFF is selected, the comparison will be made according to the original sequence. The COMParator:SWAP? query returns the current state of the swap function.
Command syntax:

COMParator:SWAP { ON | OFF | 1 | 0 }

Where,
1 (decimal 49) is equal to ON.
0 (decimal 48) is equal to OFF.
For example: WrtCmd ("COMP:SWAP ON")

Query syntax: COMParator:SWAP?
Return format: <NR1><NL^END>

The COMParator:BIN:CLEar command is used to clear all limits on limit table setup page.
Command syntax: COMParator:BIN:CLEar
For example: WrtCmd ("COMP:BIN:CLE")

The COMParator:BIN:COUNt[:STATe] command is used to set the bin count function as ON or OFF. The COMParator:BIN:COUNt[:STATe]? query returns the current state of the bin count function.
Command syntax:

COMParator:BIN:COUNt[:STATe] { ON | OFF | 1 | 0 }

Where,
1 (decimal 49) is equal to ON.
0 (decimal 48) is equal to OFF.
For example: WrtCmd ("COMP:BIN:COUN ON")

Query syntax: COMParator:BIN:COUNt[STATe]?

Return format: <NR1><NL^END>

The COMParator:BIN:COUNt:DATA? query returns the current comparison result of the bin count.
Query syntax: COMParator:BIN:COUNt:DATA?
Return format: <BIN1 count>, <BIN2 count>, …, <BIN9 count>, <OUT OF BIN count>, <AUX BIN count><NL^END>
Where,
<BIN1-9 count> is the count result of BIN1-9, in NR1 data format.
<OUT OF BIN count> is the count result of the OUT OF BIN, in NR1 data format.
<AUX BIN count> is the count result of the auxiliary bin, in NR1 data format.

The COMParator:BIN:COUNt:CLEar command is used to clear all bin count results.
Command syntax: COMParator:BIN:COUNt:CLEar
For example: WrtCmd ("COMP:BIN:COUN:CLE")

7.1.16 Mass MEMory subsystem commands

The Mass MEMory subsystem commands are used for file storing and load.
Command tree:

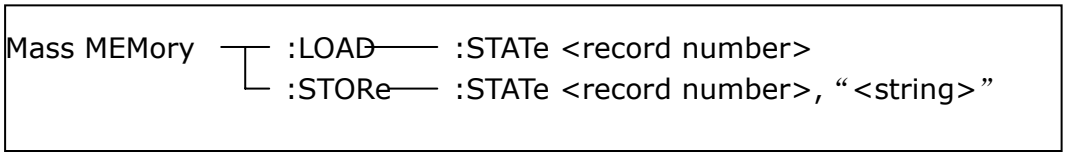

The MMEMory:LOAD:STATe command is used to load the existed file.
Command syntax: MMEMory:LOAD:STATe<value>
Where,
<value> is the file number ranging from 0 to 39 (NR1).
For example: WrtCmd ("MMEM:LOAD:STAT 1")

The MMEMory:STORe:STATe command is used to storing the current setting to a file.
Command syntax: MMEMory:STOR:STATe<value>, "<string>"
Where,
<value> is the file number ranging from 0 to 39 (NR1).
<string> can be ASCII character string (maximum length is 16).
For example: WrtCmd ("MMEM:STOR:STAT 1, "Resistor meas"")
or WrtCmd ("MMEM:STOR:STAT 1"), IF ","<string>"" has not been input, the default file name will be stored.

7.2 GPIB Common Commands

●*RST ●*TRG ●*IDN ●*TST
●*ESE ●*SRE ●*ESR ●*STB
●*OPC ●*CLS

- The *RST command resets the instrument.
  For example: WrtCmd ("*RST")
- The *TRG command triggers the measurement and then sends the result to the output buffer.
  For example: WrtCmd ("*TRG")
- The *CLS command clears the standard event status register and the service request status register.
  Command syntax: *CLS
  For example: WrtCmd ("*CLS")
- The *IDN? query returns TH2829 ID.
  Query syntax: *IDN?
  Return format: <manufacturer>,<model>,<firmware><NL^END>
  Where,
  <manufacturer> Name of Manufacturer (Tonghui)
  <model> Instrument Model (TH2829A)
  <firmware> Firmware Version (VER1.0.0)
  For example: WrtCmd("*IDN?");
- The *TST? query executes an internal self test and returns the test result as the sum of all existing errors codes. If there are no error TH2829 returns 0.
  Query syntax: *TST?
  Return format: 0<NL^END>
  Where,
  0 0（NR1 format）
  For example: WrtCmd("*TST?");
- The *ESE (standard Event Status Enable command) command sets each open bit of the standard event status register. This command returns setups of each open bit for the standard event status permission register.
  Command syntax: *ESE<value>
  Where,
  <value> NR1 format：decimal expression for each bit of operation status register.
  Descriptions for each byte of the standard event status register are shown as follows:

Bit number	Description
7	Power On(PON) Bit
6	User Request(URQ) Bit
5	Command Error(EME) Bit
4	Execution Error(EXE) Bit

3	Device Dependent Error(DDE) Bit
2	Query Error(QYE) Bit
1	Request Control(RQC) Bit
0	Operation Complete(OPC) Bit

Query syntax: *ESE?
Return format: <value><NL^END>
For example: WrtCmd ("*ESE?")

- The *SRE （Service Request Enable command）command sets each open bit of the service status byte register. This command returns the current setups for each open bit of the status byte permission register.
  Command syntax: *SRE<value>
  Where,
  <value> NR1 format: decimal expression for each permission bit of the status byte register.
  Descriptions for each byte of the status byte register are shown as follows:

Bit number	Description
7	Operation Status Register Summary Bit
6	RQS(Request Service) Bit
5	Standard Event Status Register Summary Bit
4	MAV(Message Available) Bit
3-0	Always 0(zero):

  Query syntax: *SRE?
  Return format: <value><NL^END>
  For example: WrtCmd("*SRE?");
- The *ESR? query returns the contents of the standard event status register.
  Query syntax: *ESR?
  Return format: <value><NL^END>
  Where,
  <value> NR1 format: decimal expression for contents of the standard event status register.
  Descriptions for each bit of the standard event status register

Bit number	Description
7	Power On(PON) Bit
6	User Request(URQ) Bit
5	Command Error(EME) Bit
4	Execution Error(EXE) Bit
3	Device Dependent Error(DDE) Bit
2	Query Error(QYE) Bit
1	Request Control(RQC) Bit
0	Operation Complete(OPC) Bit

For example: WrtCmd ("*ESR?")

- The *STB? query returns contents of the standard service status byte register. The execution of this command will not affect contents of the standard status byte register.

  Query syntax: *STB?

  Return format: <value><NL^END>

  Where,

  <value> NR1 format: decimal expression for contents of the standard status byte register.

  Descriptions for each bit of the standard status byte register

Bit number	Description
7	Operation Status Register Summary Bit
6	RQS(Request Service) Bit
5	Standard Event Status Register Summary Bit
4	MAV(Message Available) Bit
3-0	Always 0(zero)

  For example: WrtCmd ("*STB?")

- The *OPC command equals to set the OPC bit of the standard event status register when TH2829 finishes all parameter measurements. Ever since all pending operations have been completed, this command will inform the instrument to add a ASCII number "1" (decimal number: 49) into the output buffer.

  Command syntax: *OPC

  For example: OUTPUT 717;"*OPC"! Set the OPC bit of the instrument when the last command is done.

  Query syntax: *OPC?

  Return format: 1 <NL^END>

  Where,

  1 ASCII number 1（decimal number: 49）

  For example: WrtCmd("*OPC?")