OPERATION MANUAL

TH2817B LCR Meter

Changzhou Tonghui Electronics Co., Ltd

Add: No.3, Tianshan Road, New District, Changzhou, Jiangsu

Tel: (0519)85132222, 85113342, 85109592

Fax: (0519)85109972

Postcode: 213022

E-mail: sales@tonghui.com.cn
Website: http://www.tonghui.com.cn

Content

CHAPTER 1 GENERAL INTRODUCTION 1

1.1 FOREWORD 1
1.2 OPERATING CONDITIONS 2
1.2.1 Power requirements 2
1.2.2 Opearing temperature and humidity 2
1.2.3 Warm-up time 3
1.2.4 Notices 3
1.3 DIMENSIONS & WEIGHT 3
1.4 SAFETY SUMMARY 3
1.5 ELECTROMAGNETIC COMPATIBILITY 4
1.6 SYMBOLS AND ABBREVIATIONS 4

CHAPTER 2 BASIC SPECIFICATIONS 7

2.1 MEASUREMENT FUNCTIONS 7
2.1.1 Measurement parameters 7
2.1.2 Combinations of measurement parameters 7
2.1.3 Equivalent mode 7
2.1.4 Range 8
2.1.5 Trigger mode 8
2.1.6 Measuremetn delay 8
2.1.7 Measurement terminal mode 9
2.1.8 Measurement speed 9
2.1.9 Filtering depth 9
2.1.10 Basic accuracy 9
2.2 TEST SIGNAL 9
2.2.1 Test singal frequency 9
2.2.2 Test signal level 9
2.2.3 Output impedance 10
2.2.4 Measurement display range 10
2.3 FUNCTION 10
2.3.1 Correction 10
2.3.2 Comparator 10
2.3.3 Parameter display 11
2.3.4 Automatic LCZ 11
2.3.5 Discharging test 11
2.3.6 Memory 12
2.3.7 Interface 12

CHAPTER 3 PANEL INTRODUCTIONS 13

3.1 A TOUR OF FRONT PANEL 13
3.2 A TOUR OF REAR PANEL 15
3.3 DISPLAY DESCRIPTION 16

CHAPTER 4 OPERATION INSTRUCTIONS 18

4.1 TURNING ON THE INSTRUMENT 18
4.2 FUNCTION OPERATIONS 18
4.2.1 Primray parameter setup 18
4.2.2 Secondary parameter setup 18
4.2.3 Frequency setup 19
4.2.4 Signal voltage 19
4.2.5 Measurement speed 19
4.2.6 Trigger 19
4.2.7 Range setup 19
4.2.8 Open correction 20
4.2.9 Short correction 21
4.2.10 Display mode 21
4.2.11 Comparator 22
4.2.12 Measurement setup 22
4.2.13 Limit list setup 26
4.2.15 File operation function 30
4.2.16 System function setup 31

CHAPTER 5 REMOTE CONTROL 37

5.1 RS232C INTERFACE INTRODUCTION 37
5.1.1 RS232C connection 37
5.1.2 Communication with a computer 38
5.2 GPIB INTERFACE INTRODUCTION 43
5.2.1 GPIB connection 43
5.2.2 GPIB interface functions 45
5.2.3 GPIB addressing 45
5.2.4 GPIB bus function 45
5.2.5 Data format 46

CHAPTER 6 HANDLER INTERFACE 47

6.1 GENERAL INFORMATION 47
6.2 SIGNAL'S DEFINITION 47
6.3 ELECTRICAL CHARACTERISTICS 50
6.3.1 DC Isolated Outputs 50
6.3.2 DC Isolated Input 53

CHAPTER 7 PACKING & WARRANTY 54

7.1 PACKING 54
7.2 WARRANTY 54

Chapter 1 General Introduction

Thank you for purchasing our product. The contents of the shipment should be as listed in the packing list. If the contents are incomplete, if there is mechanical damage or defect, or if the instrument does not pass the power-on self tests, please notify our company.

1.1 Foreword

TH2817B is a precision LCR meter with high accuracy, good stability, and wide measurement range. Controlled by a 16 bits MPU, TH2817B can be used for evaluating LCR components, materials and semiconductor devices over a wide range of frequencies (50 Hz to 100 kHz) and test signal levels (0.1V, 0.3V, 1V). With its powerful function, excellent performance, perspicuous LCD display and easy menu operation, TH2817B is suitable for high speed measurement need on product line and high accuracy and stability measurement need in laboratory. By using the Handler interface, IEEE488 interface (optional), and RS232C interface, TH2817B can easily be used for automatic test system and computer remote control.

The instrument provides variable test conditions, typical conditions are as follows:

- ***Test signal frequency***

  10 typical frequency points available from 50 Hz to 100 kHz: 50Hz, 60Hz, 100Hz, 120Hz, 1kHz, 10kHz, 20kHz, 40kHz, 50kHz, 100kHz.

- ***Test signal level***

  Programmable signal level from 0.01 V to 2.00 V in 0.01 V resolution.

- ***Measurement speed***

  Fast, Medium and Slow measurement speed can be selected. Using the averaging rate (from 1 to 255 programmable) function, you can get more stable measurement results.

- ***Constant selectable source resistance***

  30 Ω or 100Ω

- ***Correction function***

  The OPEN, SHORT correction for correcting the stray admittance, the residual impedance, and the other errors can be performed. The correction function has two kinds of correction methods. In one method the open and short correction can be performed at all of the frequency points, and in the other method the open, short correction can be performed at the frequency points you specify.

TH2817B provides 3 display modes and 2 kinds of sorting modes:

- ***Direct:*** The actual measurement results are displayed.
  Absolute deviation (ΔABS): The difference between the measured value of the DUT and a previously stored reference value are displayed.
  Percentage deviation (Δ%): The difference between the measured value of the DUT and a previously stored reference value are displayed as a percentage of the reference value.
- ***Component sorting:*** Two comparison modes, absolute deviation and percent deviation can be used.
  4-bin sorting: 3 PASS bins, 1 FAIL bin, and 1 AUXiliary BIN.

TH2817B provides several communication interfaces which make it easy to output the measurement results to other equipments (for example computers), or build an automatic test system.

- ***RS232C interface:*** RS232C interface makes it easy to communicate with other quipments. You can set the measurement functions and input the parameters through RS232C interface instead of keyboard on front panel.
- ***IEEE488 interface (optional):*** IEEE488 interface helps instrument to build an automatic test system with computer and other measurement instruments.
  Command of RS232C and IEEE488 interfaces are programmed in the format of common SCPI.
- ***HANDLER interface:*** By using the handler interface, the instrument can easily be combined with a component handler, and a system controller to fully automate component testing, sorting, and quality control data processing.

TH2817B has the file function to store the set parameters, limit parameters and list sweep parameters as a file in the internal nonvolatile memory, so that the setups can be easily reloaded, and the defult file will be automatically reloaded when TH2817B is turned on.

1.2 Operating Conditions

1.2.1 Power requirements

Vltage: 220V (1±10%)
Frequency: 50Hz/60Hz (1±5%)
Power: <50VA

1.2.2 Opearing temperature and humidity

Temperature: 0°C～40°C
Humidity: <90%RH

1.2.3 Warm-up time

More than 20 minutes after the instrument is turned on.

1.2.4 Notices

- Please do not operate the instrument in the place that is vibrative, dusty, under direct sunlight, or where there is corrosive air.
- Although the instrument has been specially designed for reducing the noise cased by ac power, a place with low noise is still recommended. If this cannot be arranged, please make sure to use power filter for the instrument.
- Please store the instrument in the place where temperature is between 5℃ and 40℃, humidity is less then 85% RH. If the instrument will not be put in use for a time, please have it properly packed with its original box or a similar box for storing.
- Don't frequently turn on and off the instrument, doing so will lead to the loss of the calibrated data and the data saved by users.

1.3 Dimensions & Weight

Dimensions: 270×120×380 (mm^3)
Weight: approx. 3kg

1.4 Safety Summary

The following general safety precautions must be observed during all phases of operation, service, and repair of this instrument.

- Ground the instrument

To avoid electric shock hazard, the instrument chassis and cabinet must be connected to a safety earth ground by the supplied power cable with earth blade.

- DO NOT operate in an explosive atmosphere

Do not operate the instrument in the presence of flammable gasses or fumes. Operation of any electrical instrument in such an environment constitutes a definite safety hazard.

- Keep the instrument away from live circuits

Operator can not remove instrument's cover. Component replacement and internal adjustments must be made by qualified maintenance personnel. Do not replace components with the power cable connected. Under certain conditions, dangerous voltages may exist even with the power cable removed. To avoid injuries, always disconnect power and discharge circuits before touching them.

- DO NOT attempt service or adjustment alone

Do not attempt internal service or adjustment unless another person, capable of rendering first aid and resuscitation, is present.

- DO NOT substitute parts or modify instrument

Because of the danger of introducing additional hazards, do not install substitute parts or perform unauthorized modifications to the instrument. Return the instrument to our Sales and Service Office for service and repair to ensure that safety features are maintained.

1.5 Electromagnetic Compatibility

This product has been designed and tested to the requirements of the Electromagnetic Compatibility (EMC) Directive. To use a properly shielded cable or shielded coaxial cable to connect each of the ports to their respective controllers, peripherals, equipments or devices may ensure to meet the requirements.

1.6 Symbols and Abbreviations

ABS	absolute
ADDR	address
ALCZ	auto LCZ
ASCII	American Standard Code for Information Interchange
AUX	auxailiary
BIASM	bias mode
BINn	bin number
COMP	compare
Cs	equivalent serial capacitance
Cp	equivalent parallel capacitance
D	dissipation factor
DCL	device clear
DCHR	discharge
DCR	DC resistance
DELIM	delimiter
DIR	direct
DUT	the device under test
EXT	external
EOM	end of measurement
EOI	end or identify
ESR	equivalent serial resistance

FREQ	frequency
GTL	go to local
GET	group execution trigger
GPIB	general-purpose interface Bus
HDL	Handler interface
IDX	index
IFC	interface clear
INT	internal
KBEEP	kep beep
KLOCK	key lock
L2A	primary inductance by 2-wire measurement
L2B	secondary inductance by 2-wire measurement
LCD	liquid crystal display
LCR	inductance, capacitance, resistance
LCZ	inductance, capacitance, impedance
Lk	leakage inductance
Lp	equivalent parallel inductance
Ls	equivalent serial inductance
M	mutual inductance
MAN	manual
N	turns ratio
NOM	nominal value
PARA A	parameter A
PARA B	parameter B
PER	percentage
PHI	primary high
PLO	primary low
Q	quality factor
R	resistance, real part of impedance
R2	DC resistance by 2-wire measurement
RMT	remote control
Rs	equivalent serial resistance
RS	recommandation standard
Rp	equivalent parallel resistance
SCPI	standard command of programmable instruments
SDC	selected device clear
SEC	secondary parameter
SMD	surface mount devices

SREJ	secondary reject
SRES	source resistor
TRGEG	trigger edge
TRIG	trigger
X	reactance, imaginary part of impedance
Z	impedance
θ	phase angle
4TP	4-terminal pair

Chapter 2 Basic Specifications

2.1 Measurement Functions

2.1.1 Measurement parameters

L: inductance C: capacitance R: resistance

Z: impedance X: reactance

D: dissipation θ: phase angle Q: quality factor

2.1.2 Combinations of measurement parameters

Primary paratmeter	Secondary parameters
L	θ° (angle), θr (radian), R, X, Q, D
C	θ° (angle), θr (radian), R, X, Q, D
R	θ° (angle), θr (radian), R, X, Q, D
Z	θ° (angle), θr (radian), R, X, Q, D

Note: Suffix "s" means series; suffix "p" means parallel.

2.1.3 Equivalent mode

Series and parallel

Circuit mode		Dissipation	Conversion
L	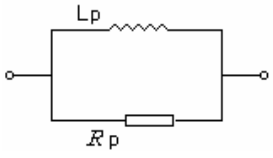	D=2πFLp/Rp=1/Q	Ls=Lp/(1+D^2) Rs=RpD^2/(1+D^2)
	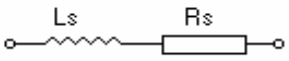	D=Rs/2πFLs=1/Q	Lp=(1+D^2)Ls Rp=(1+D^2)Rs/D^2
C	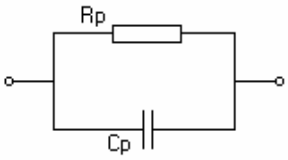	D=1/2πFCpRp=1/Q	Cs=(1+D^2)Cp Rs=RpD^2/(1+D^2)
	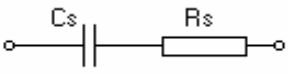	D=2πFCsRs=1/Q	Cp=Cs/(1+D^2) Rp=Rs(1+D^2)/D^2

Q=Xs/Rs, D=Rs/Xs, Xs=1/2 π FCs=2 π FLs

Note: Suffix "s" means series; suffix "p" means parallel.

The real-world capacitor, resistor and inductor are not ideal, but component of complex impedance in the form of serial connection or parallel connection. The instrument calculates necessary values according to equivalent circuit connected in series or parallel. And different result will be obtained in different circuits, differing in different components.

Two equivalent modes can be conversed through some formulas, and Q and D don't change in different modes, as shown in the above figure.

Generally speaking, component with low impedance (such as large capacitor and small inductor) is usually measured in series mode, and component with high impedance (such as small capacitor and large inductor) is usually measured in parallel mode. And the equivalent mode can be decided according to the application of component. If a capacitor is used for power filtering, series mode is the best choice, and if it's used for LC oscillat circuit, parallel mode should be selected.

2.1.4 Range

Auto, Manual
9 ranges for LCR measurement

2.1.5 Trigger mode

Internal, External, Manual, Bus

Internal: When the trigger mode is set to INTernal trigger mode, the instrument continuously repeats measurements.

External: When the trigger mode is set to EXTernal, the instrument performs a single measurement every time a low-to-high transition TTL level signal is applied to the Handler interface on the rear panel.

BUS: When the trigger mode is set to BUS trigger mode, the instrument performs a single measurement every time the *TRG common command is sent to TH2817B via GPIB. The BUS trigger mode cannot be set on the front panel. Send the TRIGger:SOURce BUS command via GPIB or RS232C to set the trigger mode to the BUS trigger mode.

Manual: When the trigger mode is set to MANual trigger mode, the instrument performs a single measurement every time when TRIGGER key on the front panel is pressed.

2.1.6 Measuremetn delay

Waiting time after measurement completes. If HANDLER interface clear has been set, signal on HANDLER interface will be cancelled after delay.

2.1.7 Measurement terminal mode

Common measurement: 4-terminal pair

Hcur: high current (abbreaviation: Hc) Lcur: low current (abbreaviation: Lc)

Hpot: high potential (abbreaviation: Hp) Lpot: low potential (abbreaviation: Lp)

Transformer measurement: 2-terminal

Hpot---Lpot: transformer's primary (winding A)

Hcur---Lcur: transformer's secondary (winding B)

Note: Make sure shielding terminals of Hcur and Lcur are reliably short with low impedance when the test fixtures or cables used don't come standard with the instrument.

2.1.8 Measurement speed

Measurement speed can be affected by test frequency, integral time, value of component, display mode, range mode, average times and comparator. And the following parameters are evaluated at the status of frequency of 10kHz, range hold, comparator off, no communication interface, which is possibly maximum values:

FAST: about 20meas/sec

MED: about 10meas/sec

SLOW: about 2meas/sec

At the frequency of being lower than 1kHz, measurement speed will slow down. And transformer parameter measurement at the same conditions, especially resistance measurement, will have lower speed.

2.1.9 Filtering depth

1～99, programmable

2.1.10 Basic accuracy

0.1%

2.2 Test Signal

2.2.1 Test singal frequency

10 typical frequencies: 50Hz, 60Hz, 100Hz, 120Hz, 1kHz, 10kHz, 20kHz, 40kHz, 50kHz, 100kHz.

Frequency accuracy: 0.02%

2.2.2 Test signal level

3 test levels: 0.1V, 0.3V, 1V

Accuracy: ±(10%×set value+2mV)

2.2.3 Output impedance

30Ω±5%, 100±5% (fixed at 100Ω source impedance at bias mode)

2.2.4 Measurement display range

Parameter	Display range
L	0.001μH～99.999kH
C	0.001pF～9999.9μF
R, X, Z	0.0001Ω～99.999MΩ
D	0.0001～9.9999
Q	0.0001～9999.9
θ	Angle: -179.99°～179.99° Radian: -3.1415～3.1415
%	-99.999%～999.99%

If non-percentage data is out of display range, it will be displayed as 99999.

2.3 Function

2.3.1 Correction

Open correction: to eliminate measurement errors due to parasitic stray admittance (C, G) of the test fixture.

Short correction: to eliminate measurement errors due to parasitic residual impedances (L, R) of the test fixture.

Cable length calibration:

0m: to measure with terminal fixture;

1m: to measure with 1m cable of TH26009, TH26011

CUST: to calibrate with cable of required length. And the shipped instrument hasn't been performed calibration.

Correction function can be turned off.

2.3.2 Comparator

The instrument can perform multi-bin sorting and support signal output of HANDLER interface.

BIN1 to BIN3: Both primary and secondary measurement parameters are within limits.

OUT BIN: Primary parameter is not within limits. Or primary parameter is within limits, secondary parameter is not within limits, and AUX bin is off.

AUX BIN: Primary parameter is within limits, but whose secondary parameter measurement result is not within limits.

Sorting mode:

ABS (absolute deviation): absolute deviation between measured result and nominal value is compared with bin limit.

PER (percentage deviation): percentage deviation between measured result and nominal value is compared with bin limit.

2.3.3 Parameter display

Direct: The actual measured values will be displayed.

⊿: Absolute devation between measured result and nominal value is displayed.

⊿%: Percentage deviation between measured result and nominal value is displayed.

2.3.4 Automatic LCZ

The instrument automatically selects L, C, Z and equivalent mode according to impedance characteristics of the device under test, to automatically recogonize unkown and mixing components.

At AUTO mode, primary and secondary parameters are selected according to impedance angle:

Impedance angle	Primary and secondary parameters
$\theta>5^o$	L-Q
$\theta<-5^o$	C-D
others	Z-θ

Equivalent mode is selected according to impedance:

Impedance	Equivalent mode
Z>1kΩ	parallel
Z<1kΩ	series

Keep the original parameter at similar status of short circuit or open circuit. If primary and secondary parameters are modified, automatic LCZ function will be cancelled.

2.3.5 Discharging test

The instrument is operated with external bias, and generally external bias source has DC isolated circuit. When discharging function is turned on, the instrument will perform low-impedance discharge on sampling path to reduce the effect on test accuracy and speed caused by charge on isolated capacitance. Low impedance lasts for 10 to 20ms.

2.3.6 Memory

The instrument's measurement parameter, such as frequency and level, measurement setups, comparator's limit data can be stored in nonvolatile storage in the form of files. When they're needed, they can be loaded directly from file menu to save time. And the latest saved and loaded file will be automatically loaded when the instrument is turned on next time.

2.3.7 Interface

- ***IEEE488 interface:*** also called GPIB interface and equal to IEC625 interface, but having different linker. Communication command is in the format of SCPI and all commands and data on BUS are sent in ASCII code. The interface supports automatic FETCH, and has the functions of SH1, AH1, T5, L4, RL1, DC1, DT1, C0, and E1. It has the compatibility of IEEE488.1 and IEEE488.2.
- ***RS232C interface:*** It uses standard minimum subclass of RS232C and doesn't support hardware connection. The interface has transfer baud rate: 4800bps, 9600bps, 11520bps, 12800bps, 14400bps, 19200bps, 28800bps, and 38400bps, signal logic level of ±8V and maximum transfer distance of 15m. The communication command is in the format of SCPI, and all commands and data on BUS are sent in ASCII code. The interface supports automatic FETCH, and ending symbol supports LF, CR, CR+LF.
- ***HANDLER interface:*** It receives trigger signal and output sorting comparison result signal and outputs synchronous signal of measurement (IDX, EOM). Low level is valid for logic level. It has internal pull-up resistance and external power is defautly used. Trigger edge has two options of rising or falling. And measurement output signal is optional to be cleared after measurement delay.

Chapter 3 Panel Introductions

3.1 A Tour of Front Panel

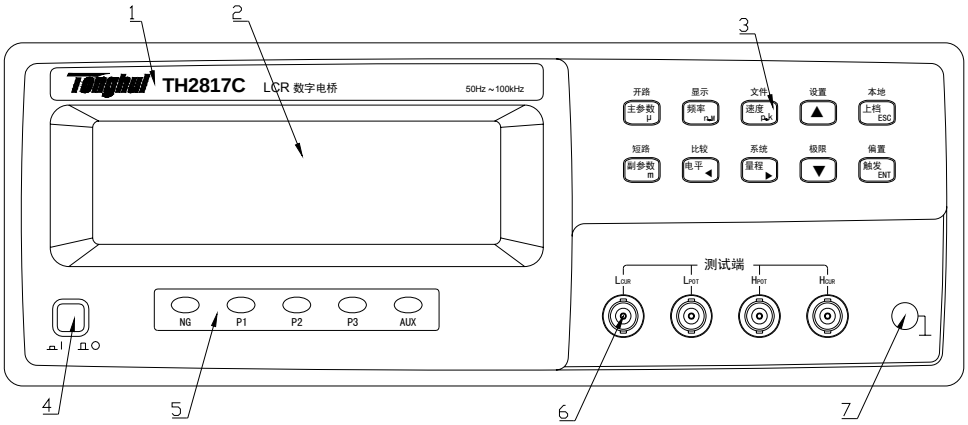

Figure 3-1 Front panel overview

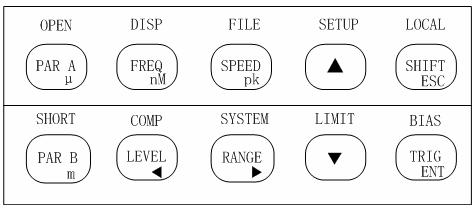

Figure 3-2 Softkeys

1) Brand and Model

The registered brand of our company and model of the instrument are printed.

2) LCD

240×64 dot-matrix Liquid Crystal Display (LCD) displays measurement results, test conditions, etc.

3) Sorting indicators

It indicates sorting result: NG—not good
P1—pass BIN1
P2—pass BIN2
P3—pass BIN3
AUX—auxiliray bin

4) Power on/off

Power on/off switch. In the "I" position all operating voltages are applied to the instrument.

In the "O" position NO operating voltages are applied to the instrument.

5) Softkeys

They have functions of three levels:

a) Functions by directly pressing softkeys

PARA A: to select primary parameters
PARA B: to select secondary parameters
FREQ: to set frequency
LEVEL: to select level
SPEED: to select measurement speed
RANGE: to set range HOLD/AUTO
SHIFT: to shift to second function
TRIGGER: to trigger single measurement
▲ ▼ is used to select select PAR, PAR B, FREQ, LEVEL, SPEED or RANGE，the object is determined by the formal press. If press PARA A firstly, then ▲ ▼ corresponds with parameter selection；press FREQ key，then ▲ ▼ corresponds with frequency selection.
LOCAL: to enter local operation at remote control mode (RMT status)

b) Functions by pressing SHIFT softkey

OPEN: to perform open correction
SHORT: to perform short correction
DISP: to select parameter display mode
COMP: to turn on or off comparator
BIAS Bias function turn on or off
SETUP: to enter measurement setup menu
LIMIT: to enter list sweep setup menu
FILE: to enter file management function menu
SYSTEM: to enter system setup menu

c) Only the following menu keys are valid after entering menu:

【ESC】
【ENTER】
【▲】: to select option or add 1
【▼】: to select option or minus 1
【◄】: to select option
【► 】: to select option
【m】、【μ】、【n】、【M】、【p】、【k】 in limit set menu，when modifying limit data, press unit rate directly to replace ENT key.

Unit rate：【p】means$\times 10^{-12}$，【n】means$\times 10^{-9}$，【μ】means$\times 10^{-6}$，【m】means$\times 10^{-3}$，【k】means$\times 10^{3}$，【M】means$\times 10^{6}$.

6) UNKNOWN terminals ⚠

These are the UNKNOWN Terminals used to connect a four-terminal pair test fixture or test

leads for measuring the device under test.

HD(H_{CUR}): High current drive

HS(H_{POT}): High potential sense

LS(L_{POT}): Low potential sense

LD(L_{CUR}): Low current drive

Note: Make sure shielding terminals of Hcur and Lcur are reliably short with low impedance when the test fixtures or cables used don't come standard with the instrument.

7) Frame terminal ⚠

This is the FRAME Terminal which is tied to the instrument's chassis and which can be used for measurements that require guarding.

3.2 A Tour of Rear Panel

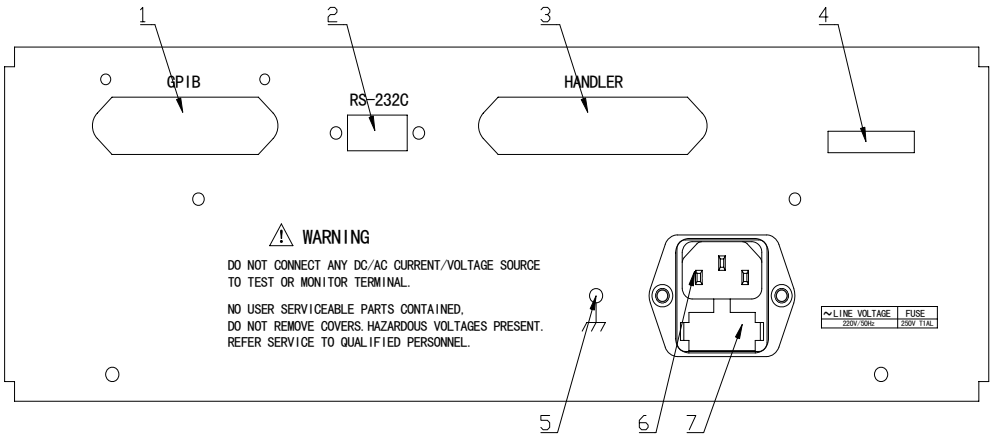

Figure 3-3 Rear panel overview

1) IEEE488 (GPIB) interface connector (Optional)

This is the IEEE488 interface connector used when operating on the General Purpose Interface Bus.

2) RS232C interface connector

This is the RS232C interface connector used when operating on the serial interface.

3) HANDLER interface connector

This is the HANDLER interface connector used when operation with a component handler to fully automate component testing, sorting, and quality control data processing.

4) Name plate

Name plate is used to provide the information of date, model, lot number and manufacturer etc.

5) Grounding

If the power cord doesn't ground or isn't reliably grounding, please connect grounding line!

6）LINE input receptacle

AC power cord receptacle.

7) Fuse holder

Fuse holder for TH2817B line fuse, 220Vac, 1A.

3.3 Display Description

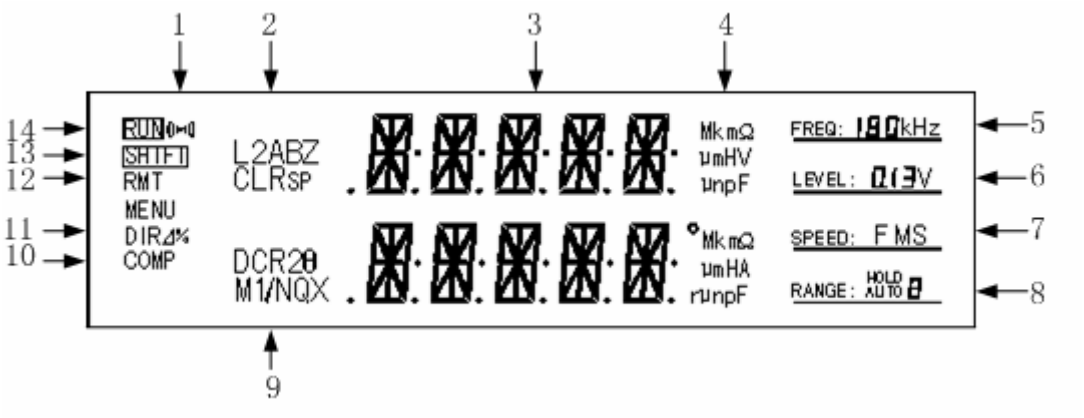

Figure 3-4 Display area

1) Alarm display

"((o))"on: to turn on alarm

"((o))" off: to turn off alarm

2) Primary parameter indicator

It indicates primary parameters of the currently measured component.

TH2817B has the following primary parameters: L_S, L_P, C_S, C_P, R_S, R_P, Z.

3) Measurement result display

It displayes measurement results of the device under test.

4) Unit display of primary and secondary parameters

It displays units of primary and secondary parameters.

Inductance unit: μH, mH, H

Capacitance unit: pF, nF, μF

Resistance/impedance unit: mΩ, Ω, kΩ, MΩ

Angle unit: °, r

5) Signal frequency indicator

TH2817B has 10 typical frequencies from 50Hz to 100kHz.

6) Singal level indicator

"0.1V": current signal voltage is 0.1V.
"0.3V": current signal voltage is 0.3V.
"1V": current signal voltage is 1V.

7) Measurement speed indicator
"F": fast
"M": middle
"S": slow

8) Range indicator
"AUTO": range auto
"HOLD": range hold
Digit 0-9 indicates current range number.
TH2817B has the function of measuring DC resistance. DC resistance doesn't have common range with AC parameters, so current display and operatable range can be switched.

9) Secondary parameter indicator
It indicates secondary parameters of the currently measured component.

TH2817B has the following secondary parameters: θ° (angle), θr (radian), R, X, Q, D.

10) Comparator indicator
"COMP" on: Comparator function is turned on.
"COMP" off: Comparator function is turned off.

11) Display mode of primary parameter
It indicates current display mode of primary parameter:
"DIR" on: direct mode.
"⊿" on: absolute deviation mode.
"%" on: percentage deviation mode.

12) RMT
RMT means the instrument is at the status of remote communication when only LOCAL key can be operated on panel.

13) Second function indicator
SHIFT on: second function
SHIFT off: first function

14) Test status indicator
RUN on: The instrument is performing a measurement.
RUN off: The instrument isn't performing measurement.

Chapter 4 Operation Instructions

4.1 Turning on the Instrument

1) Press POWER key to turn on instrument.
2) The instrument enters test status after self-inspection, as shown in Figure 4-1.



Figure 4-1 Test status

4.2 Function Operations

4.2.1 Primray parameter setup

TH2817B has the following primary parameters: L_S, L_P, C_S, C_P, R_S, R_P, Z.

Press PARA A key, and the primary parameter changes. Or press **PARA A**, then ▲、▼ to switch parameter. If the primary parameter changes, secondary parameter also changes:

Ls, Lp —— Q;
Cs, Cp —— D;
Rs, Rp —— X;
Z —— θr (radian);

4.2.2 Secondary parameter setup

TH2817B has the following common secondary parameters: θ° (angle), θr (radian), R, X, Q, D.

TH2817B also has the function of measuring DC resistance and transformer parametersw. Secondary parameters differ with parimary parameters:

Primary parameters	Secondary parameters
C_S, C_P, R_S, R_P, Z	θ° (angle), θr (radian), R, X, Q, D
L_S, L_P	θ° (angle), θr (radian), R, X, Q, D, DCR

Press PARA B key, and the secondary parameter changes. Or press **PARA B**, then ▲、▼ to switch parameter.

4.2.3 Frequency setup

TH2817B has the following test frequencies: 50Hz, 60Hz, 100Hz, 120Hz, 1kHz, 10kHz, 20kHz, 40kHz, 50kHz, 100kHz.

Press FREQ key, and the frequency changes among the foregoing frequencies. Or press**PREQ**, then▲、▼ to switch parameter.

And the current frequency is displayed in frequency area on LCD.

4.2.4 Signal voltage

TH2817B has the following 3 common signal voltages: 0.1V, 0.3V, 1V

Press LEVEL key, and the level changes. Or press**LEVEL**, then▲、▼ to switch level.
And the current voltage is displayed in voltage area on LCD.

4.2.5 Measurement speed

TH2817B has 3 measurement speeds available: F (fast), M (middle), S (slow).
Fast: about 20measurements/second.
Middle: about 10measurement/second.
Slow: about 2measurements/second.

Press SPEED key, and the speed changes. Or press**SPEED**, then▲、▼ to switch speed.
And the current measurement speed is displayed in speeda area on LCD in the form of F, M or S.

4.2.6 Trigger

When the trigger mode is set manual, the instrument performs one measurement by pressing TRIGGER key once.

4.2.7 Range setup

TH2817B totally has 9 ranges: 10Ω, 30Ω, 100Ω, 300Ω, 1kΩ, 3kΩ, 10kΩ, 30kΩ, 100k. Please select range accoding to the impedance of the device under test.

Please refer to the following table for range and its corresponding measurement range. When the instrument is working at automatic range, it can look for the most suitable range to take measurement, therefore, it's recommended to select range auto mode mostly, to avoid incorrect measurement caused by wrong selection of range.

But in some special cases, range should be held, such as measurement of the same type in batch and sorting test, in order to improve efficiency, speed and stability. Inductance's bias test should be performed at held range.

The way to hold range is to make instrument automatically measure, and hold range after

measuring out correct and stable value, or select range according to the impedance of the device under test, referring to the next table.

LCR range:

Range No.	Range	Measurement range
8	10Ω	0～10Ω
7	30Ω	10Ω～70Ω
6	100Ω	70Ω～300Ω
5	300Ω	300Ω～1kΩ
4	1kΩ	1kΩ～3kΩ
3	3kΩ	3kΩ～10kΩ
2	10kΩ	10kΩ～30kΩ
1	30kΩ	30kΩ～100kΩ
0	100kΩ	100kΩ～∞

Press **RANGE** key, and the range changes between AUTO and HOLD. Press UP or DOWN key to manually select range. And the current range No. is displayed in range area on LCD.

4.2.8 Open correction

Press SHIFT + OPEN to enter open correction menu.

TH2817B's open correction function can eliminate the effect of test cable, test fixture and stray admittance in parallel with the device under test, such as stray capacitance.

Perform the following steps to perform open correction:

1. Press **SHIFT** key at test status, and "SHIFT" at left corner is on.
2. Press **OPEN** key to select correction function, as Figure 4-2 shows on LCD.



Figure 4-2 Open spot correction

3. Select to perform spot or sweep correction through【▲】or【▼】 key, as shown in Figure4-3.



Figure 4-3 Open sweep correction

"SPOT" means only open correction for the current frequency point; while"SWEEP" means

open correction for all frequency points.

☞**Note：Press【◀】【▶】** to enter short correction menu.

4. Press ESC key to cancel correction and exit to test status.

5. Press **ENTER** key to start correction.

4.2.9 Short correction

Press SHIFT + SHORT to enter short correction menu.

TH2817B's open correction can eliminate the effect of test cable, test fixture and stray impedance in series with the device under test, such as lead resistance or lead inductance.

Perform the following steps to perform short correction:

1. Press **SHIFT** key at test status, and "SHIFT" at left corner is on.

2. Press **SHORT** key to select correction function, as Figure 4-4 shows on LCD.

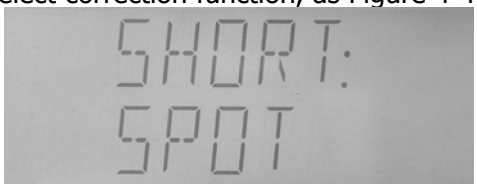

Figure 4-4 Short spot correction

3. Select to perform spot, sweep or DCR correction through【▲】or【▼】 key, as shown in "SPOT" means only short correction for the current frequency point; while"SWEEP" means short correction for all frequency points.

☞**Note：Press【◀】【▶】** to enter open correction menu.

4. Press ESC key to cancel correction and exit to test status.

5. Press **ENTER** key to start correction.

4.2.10 Display mode

Press SHIFT + DISP to change display mode.

The instrument has three display modes:

Direct display (DIR) --- Actual measured value is displayed;

Absolute deviation display (⊿) – Absolute deviation between measured value and nominal value is displayed;

Percentage deviation display (%) – Percentage deviation between measured value and nominal value is displayed.

Display mode only works for primary parameter, not secondary parameter.

Shift of display mode is related to tolerance mode of primary parameters:

When tolerance mode is absolute value (ABS) → Display mode shifts between DIR and ⊿

When tolerance mode is percentage (PER) → Display mode shifts between DIR and %.

For example:

1. The current display mode is DIR, and "DIR" is displayed on LCD, as shown in Figure4-5.



Figure 4-5 Direct display mode

2. Press **SHIFT** key, "SHIFT" at left corner is on.
3. Press **DISP** key, "⊿" or "%" is displayed on LCD, as shown in Figure 4-6.



Figure 4-6 Absolute deviation display mode

☞**Note: Please refer to limit list setup for tolerance mode.**

4.2.11 Comparator

Press SHIFT + COMP to turn on or off comparator.

After comparator is turned off, comparator indicator on panel is off, alarm doesn't beep, comparison result doesn't output through HANDLER interface, EOM of measurement's ending signal doesn't output, but AD shift signal IDX and trigger input TRIG are still valid. After comparator is turned on, "COMP" is displayed on LCD.

Perform the following steps to turn on or off comparator function:

1. Press **SHIFT** key, and "SHIFT" at left corner is on.
2. Press COMP key, "COMP" is displayed on LCD, which means comparison function has been turned on, as shown in Figure 4-7.



Figure 4-7 Comparison function on/off

4.2.12 Measurement setup

Perform the following steps to enter measurement setup page:

1. Press **SHIFT** key at test page, and "SHIFT" at left corner is on.
2. Press SETUP key to enter measurement setup page, as shown in Figure 4-8.



Figure 4-8 Measurement setup page

Measurement setup includes the following items

TRIG:	trigger mode;
DELAY:	measurement delay;
FILT:	filtering depth;
SRES:	source resistance;
DCHR:	discharging test;
CABLE:	cable length;
ALCZ:	auto LCZ switch;
ZERO:	correction switch

At measurement setup page, press【◀】or【▶】key to select item, press【▲】or【▼】key to modify value, then press【ESC】 to exit form measurement setup or data modification. When data input is valid, press【ENTER】key to enter data modification, and when data input isn't valid, press【ENTER】to exit, as【ESC】 key works.

1) TRIG

The instrument starts one measurement only after receiving one trigger signal.

There are four trigger modes: INT (internal, EXT (external), MAN (manual), BUS. The instrument only receives trigger signal at current trigger mode.

Internal: When the trigger mode is set to INTernal trigger mode, the instrument continuously repeats measurements.

External: When the trigger mode is set to EXTernal, the instrument performs a single measurement every time a low-to-high transition TTL level signal is applied to the Handler interface on the rear panel.

BUS: When the trigger mode is set to BUS trigger mode, the instrument performs a single measurement every time the *TRG common command is sent to TH2817B via GPIB. The BUS trigger mode cannot be set on the front panel. Send the TRIGger:SOURce BUS command via GPIB or RS232C to set the trigger mode to the BUS trigger mode.

Manual: When the trigger mode is set to MANual trigger mode, the instrument performs a single measurement every time when TRIGGER key on the front panel is pressed.

Perform the following steps to change trigger mode:

a) Select "TRIG" through 【◀】or【▶】key, as shown in Figure4-9.

b) Press 【▲】or【▼】 to select "INT", "MAN", or "EXT".

2) DELAY

Programmable delay from the trigger command to the start of the measurement, 0 to 60.000 s in 1 ms steps.

Perform the following steps to set delay time (unit: ms)

a) Select "DELAY" through 【◀】or【▶】key, as shown in Figure4-9.

b) Press 【▲】or【▼】 to add or minus delay time.

b) Press 【ENTER】key to enter data modification, and the data which is going to be modified twinkles, press 【▲】or【▼】key to change value. Then press 【ENTER】key to ensure data input, and 【ESC】key to cancel.

c) Press 【ESC】key to exit.

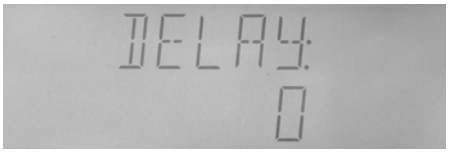

Figure 4-9 Delay setup

3) FILT

Perform the following steps to set filtering depth:

a) Select "FILT" through 【◀】or【▶】key, as shown in Figure4-10.

b) Press 【▲】or【▼】 to add or minus filtering depth.

c) Press【ENTER】key to enter data modification, and the data which is going to be modified twinkles, press 【▲】or【▼】key to change value. Then press 【ENTER】key to ensure data input, and 【ESC】key to cancel.

d) Press 【ESC】key to exit.



Figure 4-10 Filtering depth setup

4) SRES

Perform the following steps to set source resistance:

a) Select "SERS" through 【◀】or【▶】key, as shown in Figure4-11.

b) Press 【▲】or【▼】key to select "100Ω" or "30Ω".

c) Press 【ENTER】key or 【ESC】key to exit.



Figure 4-11 Resistance selection

5) DCHR

Perform the following steps to turn on or off discharging test:

a) Select "DCHR" through 【◀】or【▶】key, as shown in Figure4-12.

b) Press 【▲】or【▼】key to select "ON" or "OFF".

c) Press 【ENTER】key or 【ESC】key to exit.



Figure 4-12 Discharging switch

6) ALCZ

Perform the following steps to turn on or off auto LCZ:

a) Select "ALCZ" through 【◀】or【▶】key, as shown in Figure4-13.

b) Press 【▲】or【▼】key to select "ON" or "OFF".

c) Press 【ENTER】key or 【ESC】key to exit.



Figure 4-13 Automatic LCR switch

10) CABLE

Perform the following steps to set cable length:

a) Select "CABLE" through 【◀】or【▶】key, as shown in Figure4-14.

b) Press 【▲】or【▼】key to select "om", "1m" or "CUST".

c) Press 【ENTER】key or 【ESC】key to exit.



Figure 4-14 Cable length setup

11) ZERO

Perform the following steps to turn on or off correction function:

a) Select "CABLE" through 【◀】or【▶】key, as shown in Figure4-15.

b) Press 【▲】or【▼】key to select "ON" or "OFF".

c) Press 【ENTER】key or 【ESC】key to exit.

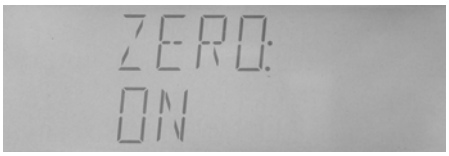

Figure 4-15 Correction switch

4.2.13 Limit list setup

TH2817B can set 3-bin limit data of primary parameter, and 1-bin limit data of secondary parameter.

The comparison result can be indicated through sorting indicators:

OUT: fail;
P1: pass bin 1;
P2: pass bin 2;
P3: pass bin 3;
AUX: auxiliary bin

The result can be output from HANDLER interface:

/BIN1/BIN2/BIN3: pass bins;
/AUX: auxiliary bin;
/OUT: fail bin;
/PHI: higher primary parameter;
/PLO: lower primary parameter;
/SREJ: secondary parameter fails

The result can also be output from alarm, referring to system setup.
Comparator's comparison and sorting:

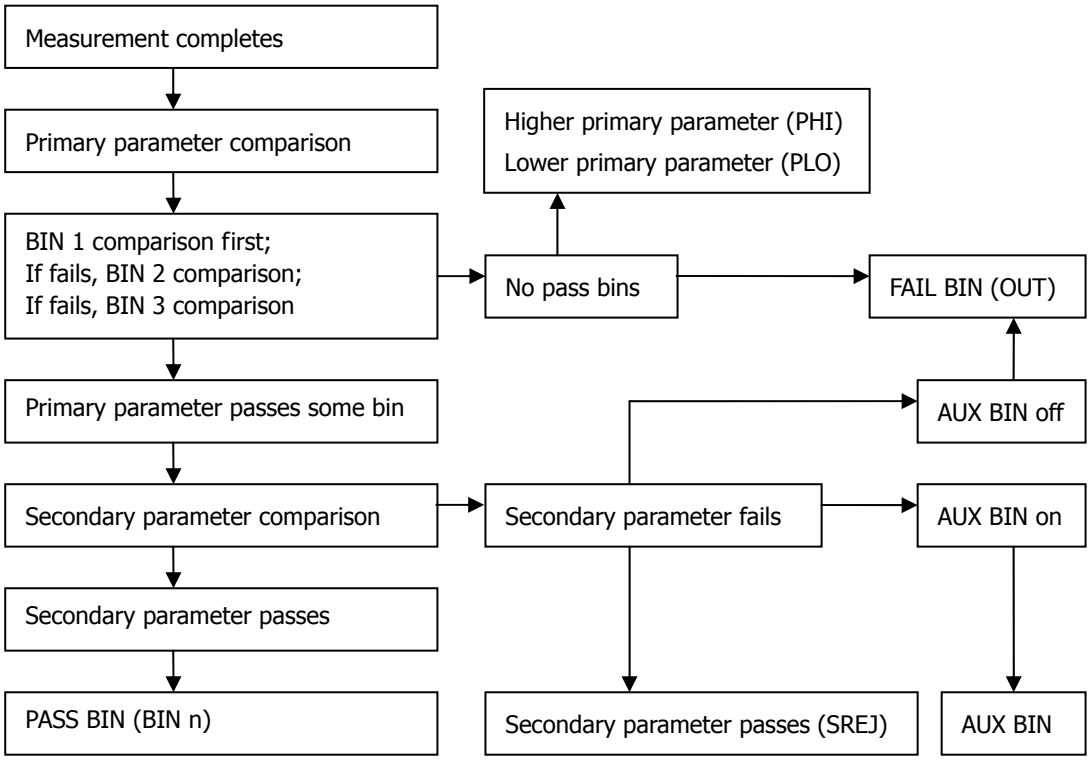

Figure 4-16 Comparator's comparison and sorting

Please first set limit list before using comparator function. If data in limit table aren't set, it will be 0.

Perform the following steps to enter limit list setup page:

1. Press **SHIFT** key at test page, and "SHIFT" at left corner is on.
2. Press LIMIT key to enter setup page, as shown in 4-17.



Figure 4-17 Limit list setup page

The following comparator parameters can be set:

AUX:	auxiliary bin on/off;
MODE:	tolerance mode of primary parameter;
NOM:	nominal value of primary parameter;
BIN1L:	low limit of primary parameter 1;
BIN1H:	high limit of primary parameter 1;
BIN2L:	low limit of primary parameter 2;
BIN2H:	high limit of primary parameter 2;

BIN3L: low limit of primary parameter 3;
BIN3H: high limit of primary parameter 3;
SEC L: low limit of secondary parameter;
SEC H: high limit of secondary parameter;

At limit setup page, press 【◀】or 【▶】 key to select item, press【▲】or 【▼】 key to modify value. When data input is valid, press 【ENTER】 key to enter data modification, and when data input isn't valid, press【ENTER】to exit, as【ESC】 key works.

1) AUX

Perform the following steps to turn on or off auxiliary item.

a) Select "AUX" item through【◀】or【▶】key at limit setup page, as shown in Figure4-21.

b) Press【▲】or【▼】key to select "ON" or "OFF".

c) Press 【ENTER】or【ESC】key to exit.

2) MODE

Primary parameter's high and low limits can be set in the form of absolute tolerance and percentage tolerance.



Figure 4—18 Primary parameter's tolerance mode

Perform the following steps to modify primary parameter's tolerance mode:

a) Select "MODE" item through【◀】or【▶】key at limit setup page, as shown in Figure4-18.

b) Press【▲】or【▼】key to select "ABS" or "PER".

c) Press 【ENTER】or【ESC】key to exit.

3) NOM

Perform the following steps to set nominal value:

a) Select "MODE" item through【◀】or【▶】key at limit setup page, as shown in Figure4-19. The current nominal value is displayed at the second line with unit corresponding with current primary parameter's type and multiple at unit column.

b) Press 【ENTER】key to enter data modification status, and the data which is going to be modified twinkles.

c) Press 【◀】or【▶】key to select data that needs modifying.

d) Press 【▲】or【▼】to modify value to 0,1,2,3,4,5,6,7,8,9, and the first value could be selected to be "-".

e) If decimal point needs repositioning, press 【◀】or【▶】key to select the decimal

point to twinkle, then press【▲】or【▼】key to move it.

f) If multiple needs modifying, press 【◀】or【▶】key to select the unit and multiple to twinkle, then press【▲】or【▼】key to modify multiple.

g) After setting, press 【ENTER】key to ensure the modification, or【ESC】key to cancel it. Or press 【m】、【μ】、【n】、【M】、【p】、【k】 directly, select rate and confirm data modification.

h) At the status of non-data modification, press【ESC】key to exit.



Figure 4-19 Nominal value setup

4) High and low limits of primary parameters setup (BIN 1L，BIN1H，BIN2L，BIN2H，BIN3L，BIN3H)

At limit setup page, select item of BIN1L, BIN1H, BIN2L, BIN2H, BIN3L, BIN3H through 【◀】or【▶】key, to set limits of bins.

At absolute tolerance mode, high and low limits of primary parameters are displayed in the similar way of nominal value with unit and multiple; at percentage tolerance mode, corresponding data are displayed in the form of percentage without unit and multiple. For example, at percentage tolerance mode, low limit of BIN1 is -5.000, then it will be displayed as -5%, as shown in Figure 4-20 and 4-21.



Figure 4-20 Data display at absolute tolerance mode



Figure 4-21 Data display at percentage tolerance

5) High and low limits of primary parameters setup (SEC L, SEC H)

There is no nominal value for secondary parameter, so only absolute limit of non-deviation type can be set.

At limit setup page, select SEC L or SEC H through【◀】or【▶】key, then set low limit and high limit of secondary parameter, as shown in Figure 4-22.



Figure 4-22 Limit setup of secondary parameter

4.2.15 File operation function

Perform the following steps to enter file operation page:

1. At test status, press **SHIFT** key, and "SHIFT" at left corner is on.
2. Press FILE key to enter file operation page, and the instrument first displays currently-used file No., (if no file is loaded, the default setup of file No. 0 displays), as shown in 4-23.



Figure 4-23 File operation page

File can be saved, loaded or erased.

1) SAVE

This operation saves the current setups to appointed file No. Perform the following steps to save file:

a) Select "SAVE" at file operation page through【◄】or【►】key, as shown in Figure4-25.

b) Press【▲】or【▼】key to select appointed file No. from 0-9. Displayed "Y" means the file has existed, and it will be covered at the time of saving, and "N" means the file doesn't exist.

c) Press【ENTER】key to perform the saving operation, and "WAIT" displays.

d) Press【ESC】to exit.

2) LOAD

The operation loads setups of appointed file. Perform the following steps to load file.

a) Select "LOAD" at file operation page through【◄】or【►】key, as shown in Figure4-24.

b) Press【▲】or【▼】key to select loading file No. Displayed "Y" means the file has existed, and it will be loaded, and "N" means the file doesn't exist.

c) Press【ENTER】key to perform the loading operation, and it automatically exits back to measurement page after loading completes.

d) Press【ESC】to exit.

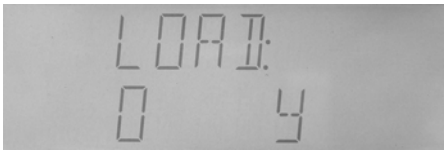

Figure 4-24 Loading file

3) ERASE

Perform the following steps to erase file:

a) Select "ERASE" at file operation page through【◀】or【▶】key, as shown in Figure4-25.

b) Press【▲】or【▼】key to select erasing file No. Displayed "Y" means the file has existed, and "N" means the file doesn't exist.

c) Press【ENTER】key to perform the erasing operation, and hint "SURE" to ensure the operation, press【ENTER】key to erase the file, otherwise, press【ERC】key to give up the operation.

d) Press【ESC】to exit.

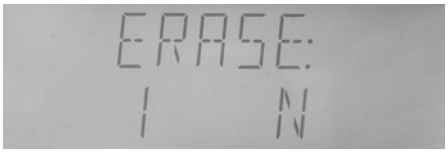

Figure 4-25 Erasing file

4.2.16 System function setup

System setup includes the following items:

BUS:	BUS mode
ADDR:	GPIB address;
BAUD:	RS232C communication baud rate;
DELIM:	ending symbol;
FETCH:	fetch mode;
TRGEG:	HANDLER interface's trigger edge;
HD:	HANLDER interface's signal hold;
ALARM:	comparator alarm;
SOUND:	alarm sound;
KBEEP:	key beep on/off;
KLOCK:	key lock on/off;
SAVE:	saving system setups

Perform the following steps to enter system setup page:

1. At test status, press **SHIFT** key, and "SHIFT" at left corner is on.
2. Press SYSTEM key to enter system setup page, as shown in 4-26.



Figure 4-26 System setup

1) BUS

There are 3 BUS types:

OFF: communication interface off;

RS232: RS232C communication interface is turned on, and GPIB communication function is turned off;

GPIB: GPIB (IEEE488) communication interface is turned on, and RS232C communication function is turned off.

Perform the following steps to select BUS type:

a) At system setup page, select "BUS" through 【◀】or【▶】key, as shown in Figure 4-30.

b) Press 【▲】or【▼】key to select "RS232C", "GPIB" or "OFF".

c) Press 【ENTER】key or【ESC】key to exit.

2) ADDR

Address can be changed from 0 to 31.

Perform the following steps to select:

a) At system setup page, select "ADDR" through 【◀】or【▶】key, as shown in Figure 4-17.

b) Press 【▲】or【▼】key to add or minus address.

c) Press 【ENTER】key to enter data modification status and modifying data twinkles, then press【◀】or【▶】key to select the data that is going to be modified, press【▲】or【▼】key to modify value. Then press【ENTER】key to ensure the modification, or【ESC】key to give up it.

d) Press 【ESC】key to exit.



Figure 4-27 Communication address setup

3) BAUD

TH2817B's RS232C supports 8 common baud rates: 4800bps, 9600bps, 11520bps, 12800bps, 14400bps, 19200bps, 28800bps, and 38400bps.

Perform the following steps to select baud rate:

a) At system setup page, select "BAUD" through 【◀】or【▶】key, as shown in Figure 4-28.

b) Press 【▲】or【▼】key to select baud rate.

c) Press 【ENTER】key or【ESC】key to exit.



Figure 4-28 Baud rate setup

4) DELIM

TH2817B supports to send several common ending symbols:

LF: line change symbol (ASCII ode 100);

CR: enter symbol (ASCII code 13);

CR+LF: enter to change line

Perform the following steps to select:

a) At system setup page, select "DELIM" through 【◀】or【▶】key, as shown in Figure 4-29.

b) Press 【▲】or【▼】key to select ending symbol that needs setting.

c) Press 【ENTER】key or【ESC】key to exit.

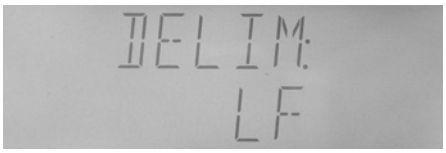

Figure 4-29 Ending symbol selection

5) FETCH

The measurement result can be automatically sent or queried when the instrument communicates with PC through RS232C or GPIB.

Perform the following steps to select:

a) At system setup page, select "FETCH" through 【◀】or【▶】key, as shown in Figure 4-30.

b) Press 【▲】or【▼】key to select fetch mode.

c) Press 【ENTER】key or【ESC】key to exit.



Figure 4-30 Fetch mode

6) TRGEG

There are two kinds of trigger edges:

RISE: Measurement starts at trigger pulse's rising edge;

FALL: Measurement starts at trigger pulse's falling edge.

Perform the following steps to set the edge mode:

a) At system setup page, select "TRIGER" through 【◀】or【▶】key, as shown in Figure 4-31.

b) Press 【▲】or【▼】key to select trigger edge mode.

c) Press 【ENTER】key or【ESC】key to exit.



Figure 4-31 Trigger edge

7) HDL

Perform the following steps set signal hold:

a) At system setup page, select "HDL" through 【◀】or【▶】key, as shown in Figure 4-32.

b) Press 【▲】or【▼】key to select HOLD or CLEAR.

c) Press 【ENTER】key or【ESC】key to exit.



Figure 4-32 HANDLER interface's signal hold

8) ALARM

TH2817B provides alarm function for sorting result.

OFF: alarm off;

NOGO: alarm at fail (no good);

AUX: alarm at auxiliary bin;

PASS: alarm at any pass bin

Perform the following steps to set alarm:

a) At system setup page, select "ALARM" through 【◀】or【▶】key, as shown in Figure 4-33.

b) Press 【▲】or【▼】key to select alarm mode.

c) Press 【ENTER】key or【ESC】key to exit.



Figure 4-33 Comparator's alarm setup

9) SOUND

There are 6 sounds available:

LO.SHT: low and short;

LO.LON: low and long;

LO.TWO: two short and low;

HI.SHT: high and short;

HI.LON: high and long;

HI.TWO: two short and high

Perform the following steps to set sound:

a) At system setup page, select "SOUND" through 【◀】or【▶】key, as shown in Figure 4-34.

b) Press 【▲】or【▼】key to select sound.

c) Press 【ENTER】key or【ESC】key to exit.



Figure 4-34 Comparator's alarm sound

10) KBEEP

Perform the following steps to set key beep.

a) At system setup page, select "KBEEP" through 【◀】or【▶】key, as shown in Figure 4-35.

b) Press 【▲】or【▼】key to turn on or off keylock.

c) Press 【ENTER】key or【ESC】key to exit.



Figure 4-35 Key beep on/off setup

11) KLOCK

Perform the following steps to set keylock.

a) At system setup page, select "KLOCK" through 【◀】or【▶】key, as shown in Figure 4-36.

b) Press 【▲】or【▼】key to turn on or off keylock.

c) Press 【ENTER】key or【ESC】key to exit.



Figure 4-36 Keylock on/off setup

After keylock is set, function keys on panel can't be available. Press SHIFT, then **SYSTEM** to enter "KLOCK" operation, press 【▲】or【▼】to unlock.

12) SAVE

Perform the following steps to save setups:

a) Select "SAVE" through 【◀】or【▶】key, as shown in Figure 4-37.

b) Press 【ENTER】to save setups.

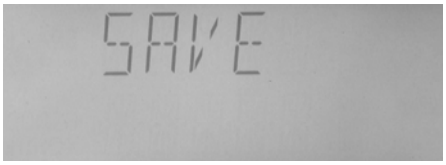

Figure 4-37 Saving system setup

Chapter 5 Remote Control

TH2817B has the RS232C serial interface and the parallel GPIB (optional) interface. Both interfaces can be used to remotely control TH2817B, but they can not be used at the same time. The two interfaces share the same program commands, but they have different hardware configurations and different communication protocols. This chapter provides the information about the two interfaces and how to use the interfaces.

5.1 RS232C Interface Introduction

The RS232C interface can be used to remotely control the TH2817B, and it also can be used to control the DC current bias sources manufactured by our company such as TH1773/TH1775 DC current bias source. All operations from the front panel can be performed by a computer via the serial interface.

5.1.1 RS232C connection

RS232C Standard now is widely used as the serial communication standard. RS232 stands for Recommend Standard number 232 and C is the latest revision of the standard. The serial ports on most instruments use a subset of the RS-232C standard. The full RS-232C standard specifies a 25-pin "D" connector of which 22 pins are used. Most of these pins are not needed for normal serial communications, and the common RS232 signals are listed as follows.

Function	Code	25 Pin Connector Pin Number	9 Pin Connector Pin Number
Request To Send	RTS	4	7
Clear To Send	CTS	5	8
Data Set Ready	DSR	6	6
Data Carrier Detect	DCD	8	1
Data Terminal Ready	DTR	20	4
Transmitted Data	TXD	3	3
Received Data	RXD	2	2
Signal Ground Common	GND	7	5

TH2817B only uses the smallest subset of the RS232C standard, the signal are listed as

follows.

Function	Code	9 Pin Connector Pin Number
Transmitted Data	TXD	3
Received Data	RXD	2
Signal Ground Common	GND	5

TH2817B's RS232 interface may be different with the standard RS232C. The pin configuration is shown as follows.

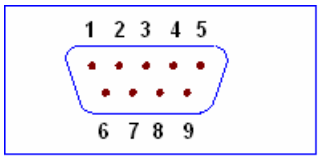

5.1.2 Communication with a computer

- Diagram of connection to a controller.

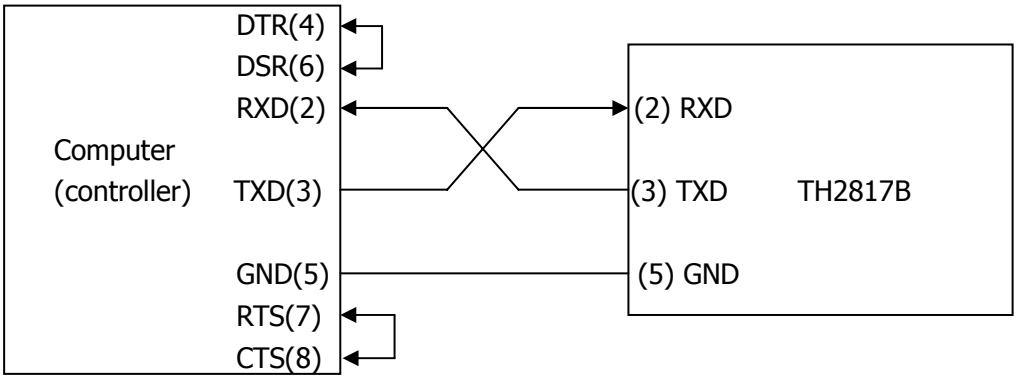

There may be some difference between TH2817B's RS232 interface and a standard RS232C interface. You can make the connection cable by yourself according the diagram or order one from our company.

Note: Pin 4 and 6, pin 7 and 8 are shorted respectively at the end of controller.

- When the RS232C interface is used to communicate with a controller, RS232 bus mode should be selected as follows.
  1) Press SYSTEM menu key, the ***System Config*** page will be displayed.
  2) Move the cursor to the ***Bus Mode*** field.
  3) Press RS232 to select the bus mode to RS232 bus mode.

- Serial Interface Specifications

Baud Rate	4800 bps，9600 bps，11520 bps，12800 bps，14400 bps，19200 bps，28800 bps，38400 bps
Date Bits	8 Bits

Stop Bits	1 Bit
Parity Bit	None
End of Sequence	NL (ASCII Code 10)
Connector	DB9

- Software Protocol

1) The controller sends the command using the ASCII code with NL as the end character. TH2817B executes the command after the end character NL is received.

2) The character received by TH2817B will be sent back to the controller again. The controller will not send the next character until the last return character is received correctively from TH2817B. If the controller cannot receive the character sent back by TH2817B, the reasons may be as follows.
   A. The serial interface is not connected correctly.
   B. Check if the RS232 function is turned on and TALK ONLY function is turned off.
   C. When TH2817B is executing a bus command, TH2817B will not accept any character through the serial interface at the same time and the character sent by controller will be ignored. In order to make sure the whole command is sent and received correctly, the character without a return character should be sent again by the controller.

3) TH2817B sends information under following two conditions. The first is when a character is received normally; TH2817B will send the character back as response. The second is when a query command is received; TH2817B will send the query response information.

4) Once a query command is received, TH2817B will send the query response information immediately even if the whole command has not been executed. So if the command includes two queries, the controller should read the query responses twice. One query is recommended to be included in a single command.

5) A query response is sent out in ASCII codes with NL as the terminal character.

6) Several query responses will be sent continuously with 1ms interval. The controller should be ready to receive the responses; otherwise the response information will be lost.

7) The controller should receive the query response terminal character NL. Otherwise you will confuse a terminal character NL with a returned character. At the same time the controller should receive the last returned character before receiving a query response.

8) For some commands that will take a long time to execute, for example Correction command, the controller should keep waiting to avoid the next command being lost when TH2817B is executing the former command.

- Sample Program for Serial Interface

The following is a C language sample program under DOS environment. The main function may be expanded by users, and the other sub functions teach you how to input or output a character string via the RS232 interface.

```
#define PORT 0
#include "dos.h"
#include "stdio.h"
#include "stdlib.h"
#include "ctype.h"
#include "conio.h"

void port_init( int port,unsigned char code );
int check_stat( int port );              /* read serial port state(16bit) */
void send_port( int port,char c );       /* send a character to serial port */
char read_port( int port );              /* recive a character form serial port */
void string_wr( char *ps );              /* write a string to serial port */
void string_rd( char *ps );              /* read a string from serial port */
char input[256];                         /* quary recieve bufer */

main()
{
  port_init( PORT,0xe3 );/* initilize serial port:baud = 9600,no verify,1 bit stop,8 bit data
*/
  string_wr( "trig:sour bus;*trg" );
  string_rd( input );
  printf( "\n%s",input );
  string_wr( "freq 10khz" );
  string_wr( "func:imp:apar cs;bpar d" );
  string_wr( "voltage:level 0.3v" );
}


/* write string to serial port */
void string_wr( char *ps )
{
  unsigned char c;
  int m,n;
  while( check_stat(PORT) & 256 ) read_port( PORT );/* read data until null */

  for( m = 1000;m;m-- ) /*communication handshake:wait until ready*/
```

```
  { send_port( PORT,0xaa );
    for( n = 100;n;n-- )
    {
      delay( 2 );   /* wait about 2ms */
      if( kbhit() && ( getch() == 27 ) )   /* if escape key keypress */
      { printf( "\nE20:Serial Port Write Canceled!" );
        exit(1);
      }
      if( check_stat(PORT) & 256 )
      { c = read_port( PORT );
        break;
      }
    }
    if( n ) break;/*TH2817B/C not ready for receive*/
  }
  if( c != 0xcc )/*check receive*/
  { printf( "\nE10:Serial Port HandShake Failure!" );
    exit(1);
  }

/*handshake success,begin send string：*/
  for( ;*ps; )
  {
    send_port( PORT,*ps++ );
    delay(2);
  }
  send_port( PORT,'\n' );
  delay(2);
}

/* read string from serial port */
void string_rd( char *ps )
{
  unsigned char c,i;
  for( i = 0;i < 255;i++ )                    /* max read 256 characters */
  {
    while( ! (check_stat(PORT) & 256) )   /* wait serial recieve ready */
      if( kbhit() && (getch() == 27) )   /* if escape key keypress */
      { printf( "\nE21:Serial Port Read Canceled!" );
        exit(1);
      }

    c = read_port( PORT );
    if( c == 0xcc ) continue;/*skip the more handshake characters*/
```

```
      if( c == '\n' ) break;
      *ps = c;
      ps++;
   }
   *ps = 0;
}

/* send a character to serial port */
void send_port( int port,char c )
{
   union REGS r;
   r.x.dx = port;              /* serial port */
   r.h.ah = 1;                 /* int14 function1:send character */
   r.h.al = c;                 /* character to be sent */
   int86( 0x14,&r,&r );
   if( r.h.ah & 128 )        /* check ah.7,if set by int86( 0x14,&r,&r ),mean trans error */
   { printf( "\nE00:Serial port send error!" );
      exit(1);
   }
}
/* read a character from serial port */
char read_port( int port )
{ union REGS r;
   r.x.dx = port;              /* serial port */
   r.h.ah = 2;                 /* int14 function2:read character */
   int86( 0x14,&r,&r );
   if( r.h.ah & 128 )        /* if ah.7 be set,mean trans error */
   { printf( "\nE01:Serial port read error!" );
      exit(1);
   }
   return r.h.al;
}

/* check the status of serial port */
int check_stat( int port )
{ union REGS r;
   r.x.dx = port;              /* serial port */
   r.h.ah = 3;                 /* int14 function3:read status */
   int86( 0x14,&r,&r );
   return r.x.ax;              /* ax.7 show serial operation, ax.8 show serial recive ready */
}

/* initialize the serial port */
void port_init( int port,unsigned char code )
```

```
{ union REGS r;
   r.x.dx = port;          /* serial port */
   r.h.ah = 0;              /* int14 function0:initial serial port */
   r.h.al = code;          /* initialization code */
   int86( 0x14,&r,&r );
}
```

5.2 GPIB Interface Introduction

5.2.1 GPIB connection

When configuring a GPIB system, the following restrictions must be adhered to.

- The total length of cable in one bus system must be less than or equal to two meters times the number of devices connected on the bus (the GPIB controller counts as one device) and the total length of cable must not exceed 20 meters.
- A maximum of 15 devices can be connected on one bus system.
- There are no restrictions on how the cables are connected together. However, it is recommended that no more than four piggyback connectors be stacked together on any one device. The resulting structure could exert enough force on the connector mounting to damage it.

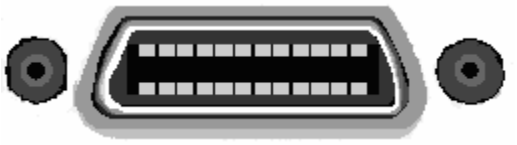

Figure 5-1 GPIB connection

Typical GPIB System Interconnection-1

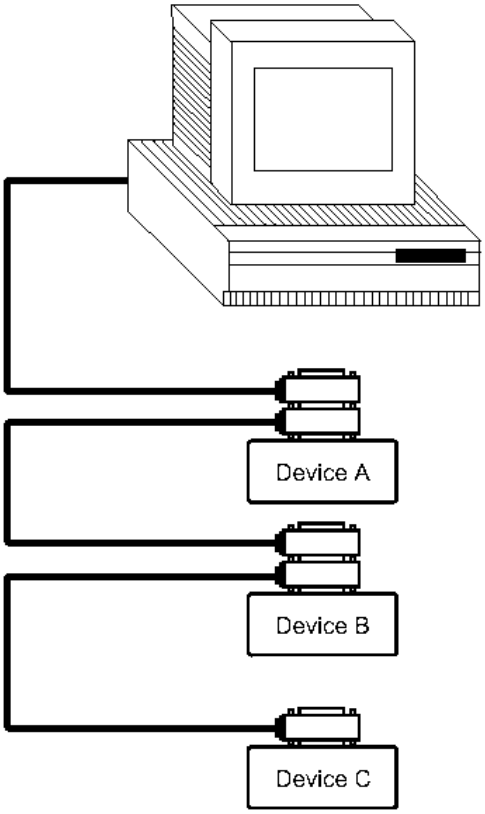

Figure 5-2 Typical GPIB System Interconnection-1

Typical GPIB System Interconnection-2

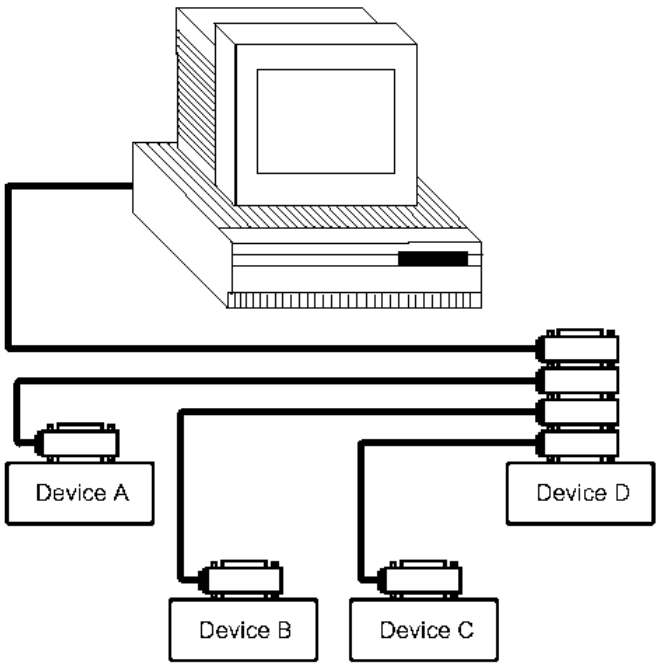

Figure 5-3 Typical GPIB System Interconnection-2

5.2.2 GPIB interface functions

TH2817B's GPIB functions are listed in the following table.

Code	Function
SH1	Complete Source Handshake capability
AH1	Complete Acceptor Handshake capability
T3	Basic Talker; Talk-Only; unaddressed if MLA; no serial poll
L3	Basic Listener; unaddressed if MTA; no Listen Only
RL1	Remote/Local capability
DC1	Device Clear capability
DT1	Device Trigger capability
C0	No Controller capability
E1	Drivers are open-collector

5.2.3 GPIB addressing

TH2817B's GPIB address is stored in non-volatile memory and can be set to any address from 0 to 30 by front panel key entry in the System Config page. When TH2817B is shipped from the factory, the default GPIB address is 8. For more information, refer to " 4.2.16 GPIB Address".

5.2.4 GPIB bus function

TH2817B will respond to the following bus commands.

- ABORT I/O (IFC)

ABORT I/O (IFC control line TRUE) halts all bus activity and deselects TH2817B.

- DEVICE CLEAR (SDC or DCL)

This command can be used with an address to clear a particular device (SDC : selected device clear) or used without an address (DCL : clears all devices). The Input buffer is cleared, output data buffer is cleared and bit 4 (MAV bit) of the status byte is set to "0", when TH2817A receives this command.

- LOCAL (GTL)

LOCAL returns control of a listening device to front panel control.

- REMOTE (RMT)

REMOTE sets TH2817B to the remote mode. When this command is sent, front panel with the exception of LOCAL softkey will be disabled.

- TRIGGER (GET)

It enables TH2817B to the TRIGGER bus command. This command may be sent to a selected device or to all devices addressed as listeners on the GPIB bus. TH2817B must first be addressed as a listener, second the trigger mode is set to the BUS trigger mode before the trigger message is sent. This command is equal to the SCPI command TRIG+FETCh? or the common command *TRG.

5.2.5 Data format

TH2817B outputs the measurement results using the ASCII via the GPIB bus. The Format 1 is used by ***MeasDisplay*** page, ***BinNo. Disp*** page and ***Bin Count*** page, while Format 2 is used by ***List Sweep*** page. The two formats are described respectively as follows.

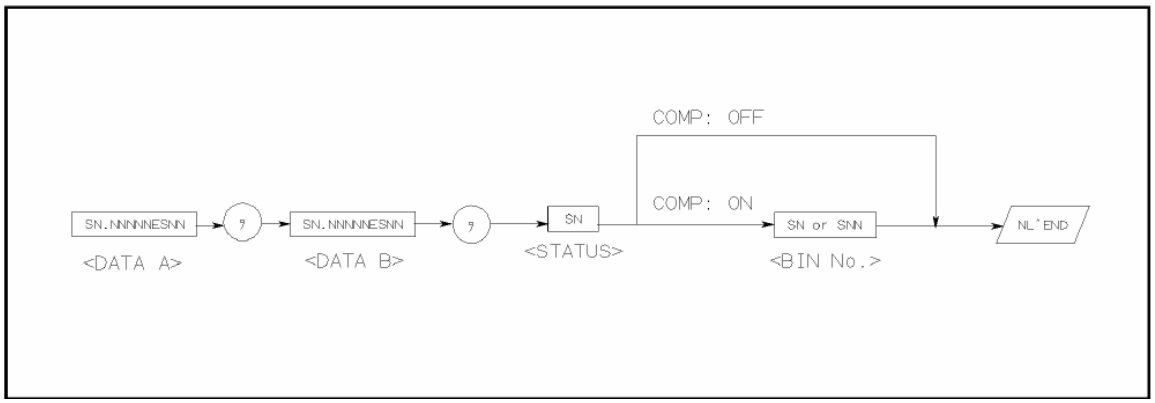

Figure 5-4 Data format 1

The <DATA A>, <DATA B>, and <BIN> formats are as follows.

- <DATA A> and <DATA B> format:

The data output formats for <DATA A> (primary parameter's measurement data), and <DATA B> (secondary parameter's measurement data) uses the 12 ASCII character fixed length format as follows.

SN.NNNNNESNN

(S: +/-, N: 0 to 9, E: Exponent Sign)

- <BIN> Format:

The <BIN No.> data shows the bin sorting results as follows.

Data	Sorting Results
1	BIN 1
2	BIN 2
3	BIN 3
4	AUX_BIN
5	OUT_OF_BINS

The <BIN No.> data is output with the measurement data only when the comparator function is set to ON.

Chapter 6 Handler Interface

6.1 General Information

The handler interface outputs signals to indicate measurement completed, bin sorting judgments of the comparator function, and Go/No-Go judgments of the list sweep comparator function. The handler interface also has an input for an external trigger signal. Using these signals, TH2817B can easily be combined with a component handler and a system controller to fully automate component testing, sorting, and quality control data processing to increase production efficiency. Table 9-1 lists the handler interface specifications.

Specifications

Output signal (Negative true, open collector, opto-isolated)	Decision output for comparator function	Bin number, out of bins, and rejection status
	Decision output for list sweep comparator function	IN/OUT at each sweep point and pass/fail for the result of sequential comparisons
	IDX	Analog measurement complete
	EOM	Full measurement complete. Display time is not included on the BinNo Disp page. Display time is included on the List Sweep page.
Input Signal (Opto-isolated)	TRIG	External Trigger, Pulse width≥1μs

Table 6-1 Specifications of handler interface

6.2 Signal's Definition

Pin No.	Signal Name	Description
1	/BIN1	Bin sorting judgments.
2	/BIN2	All bin sorting signal outputs are opto-isolated open collector.
3	/BIN3	
4	NC	No Connection
5	NC	No Connection
6	NC	No Connection
7	NC	No Connection

8	NC	No Connection
9	NC	No Connection
10	/OUT	Bin sorting judgments.
11	/AUX	All bin sorting signal outputs are opto-isolated open collector.
12	/TRIG	External Trigger:
13	/TRIG	TH2817A is triggered on the rising edge of a pulse applied to this pin when the trigger mode is set to EXT mode.
14	EXV2	External DC voltage 2:
15	EXV2	DC voltage supply pins for DC isolated control signals (/TRIG, /IDX, /EOM). Setting of internal jumpers must be changed when using an internal voltage supply.
16	VCC	Internal voltage supply (maximum 100 mA)
17		Setting of internal jumpers must be changed when using an
18		internal voltage supply.
19	/PHI	Primary Parameter High Reject:
		The measurement value is greater than the high limit value of BIN1–BIN3.
20	/PLO	Primary Parameter Low Reject:
		The measurement value is less than the low limit value of BIN1-BIN3.
21	/SREJ	Secondary Parameter Reject:
		The measurement value is not within the range of the secondary parameter limit.
22	NC	No Connection
23	NC	No Connection
24	NC	No Connection
25	NC	No Connection
26	NC	No Connection
27	EXTV1	External DC voltage 1:
28	EXTV1	DC voltage supply pins for DC isolated open collector outputs, /BIN1-/BIN3, /AUX, /OUT, /PHI, /PLO, /SREJ. The setting of internal jumpers must be changed when using the internal voltage supply.
29	NC	No Connection
30	/IDX	/IDX signal is asserted when an analog measurement is completed and TH2817A is ready for the next DUT to be connected to the UNKNOWN terminals. The measurement data, however, is not valid until /EOM is asserted.
31	/EOM	End of Measurement:
		This signal is asserted when the measurement data and comparison results are valid.
32	COM2	Common for EXTV2

33	COM2	
34	COM1	Common for EXTV1
35	COM1	
36	COM1	

Table 6-2 Pin assignments for comparator function

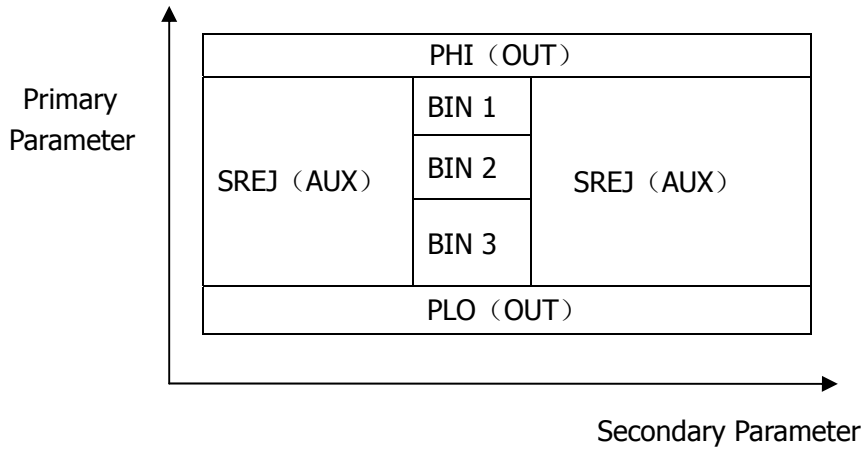

Figure 6-1 /PHI, /PLO, /SREJ signal's area example

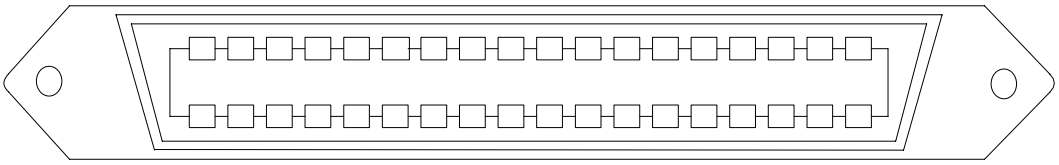

Figure 6-2 Pin assignment for handler interface connector

VCC VCC VCC /EXV2 /EXV2 /TRIG /TRIG /AUX /OUT

18 17 16 15 14 13 12 11 10

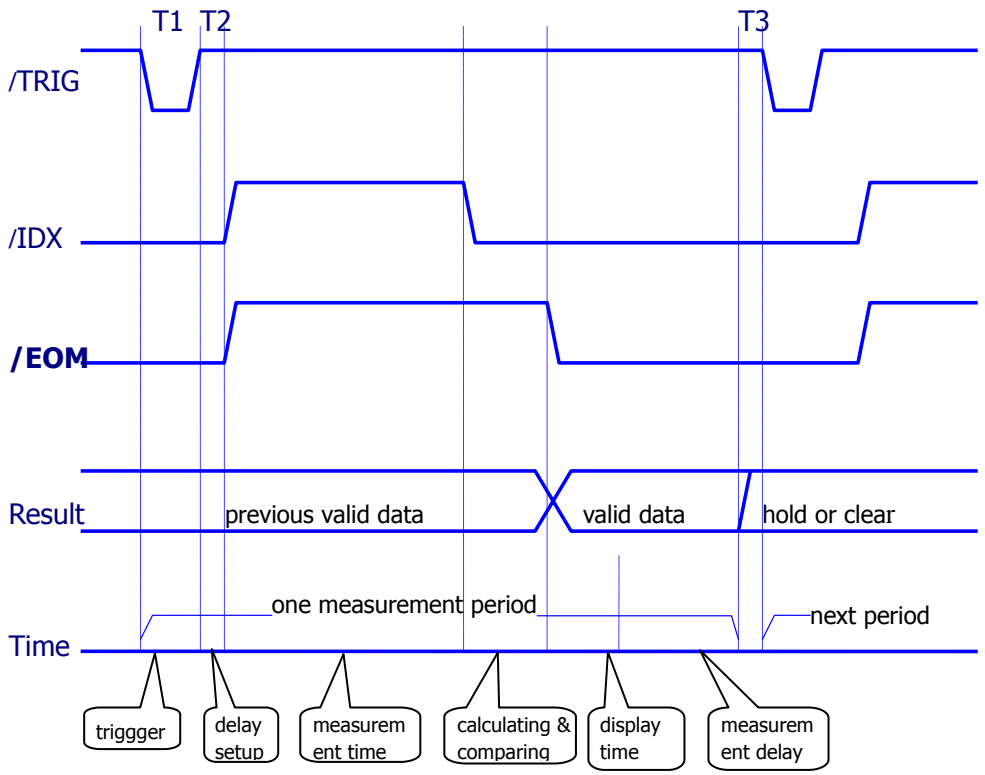

Time	Min. value	Max. value
T1 Trigger pulse width	10us	---
T2 Measurement start and setup	200us	2ms
T3 Trigger waiting time	0us	Next valid trigger will be memorized since this measurement.
Measurement time——fast	16ms+9T	20T at f<1kHz
——middle	80ms+9T	20T at f<1kHz
——slow	320ms+4T	320ms+9T at f≥1kHz
Calculating and hanlding time	10ms	---
Display time	15ms	---
Measurement delay	0ms	60s

Figure 6-3 Time diagram

6.3 Electrical Characteristics

6.3.1 DC Isolated Outputs

Each DC output (pins 1 through 11, pins 19 through 21, pins 30 through 31) is isolated using an open collector output opto-coupler. The output voltage of each line is set by a pull-up resistor on the handler interface board. The pull-up resistors can be connected to

the internally supplied voltage (+5V), or to an externally applied voltage (EXTV: +5V to +24V) by setting jumpers.

The electrical characteristics of the DC isolated outputs are divided into two types (See Table 6-4).

Since the power source for the Comparison Output and Control Output signals are different, two circuit commons (COM1, COM2) are made available.

Output Signals	Voltage Output Rating		Maximum Current	Circuit Common
	Low	High		
Comparison Signals /BIN1 - /BIN3 /OUT /AUX /PHI /PLO /SREJ	≤0.5V	+5V to +24V	6mA	Internal pull-up voltage: Circuit common (GND) External voltage (EXTV1): COM1
Control Signals /IDX /EOM	≤0.5V	+5V to +24V	6mA	Internal pull-up voltage: Circuit common (GND) External voltage (EXTV2): COM2

Figure 6-4 DC Isolated output electrical characteristics

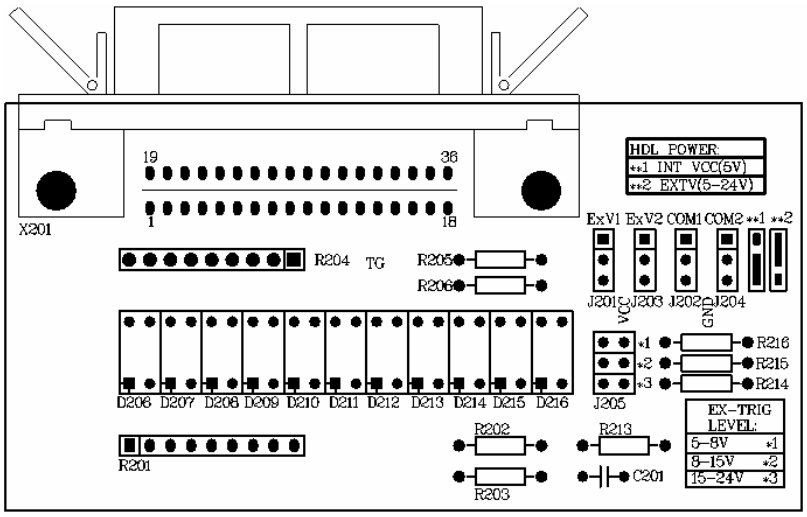

Figure 6-5 Position and setup of HANDLER interface's jumpers

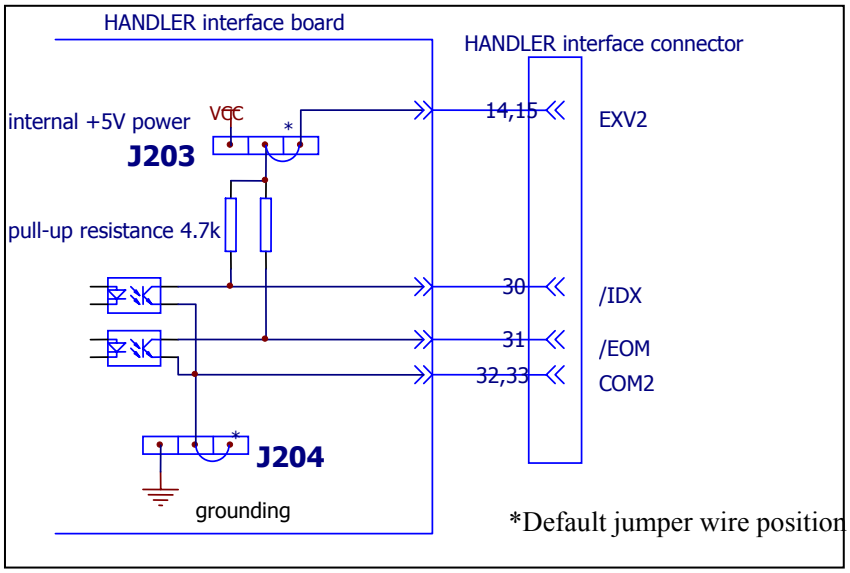

Figure 6-6 Simplified diagram of the control output signals

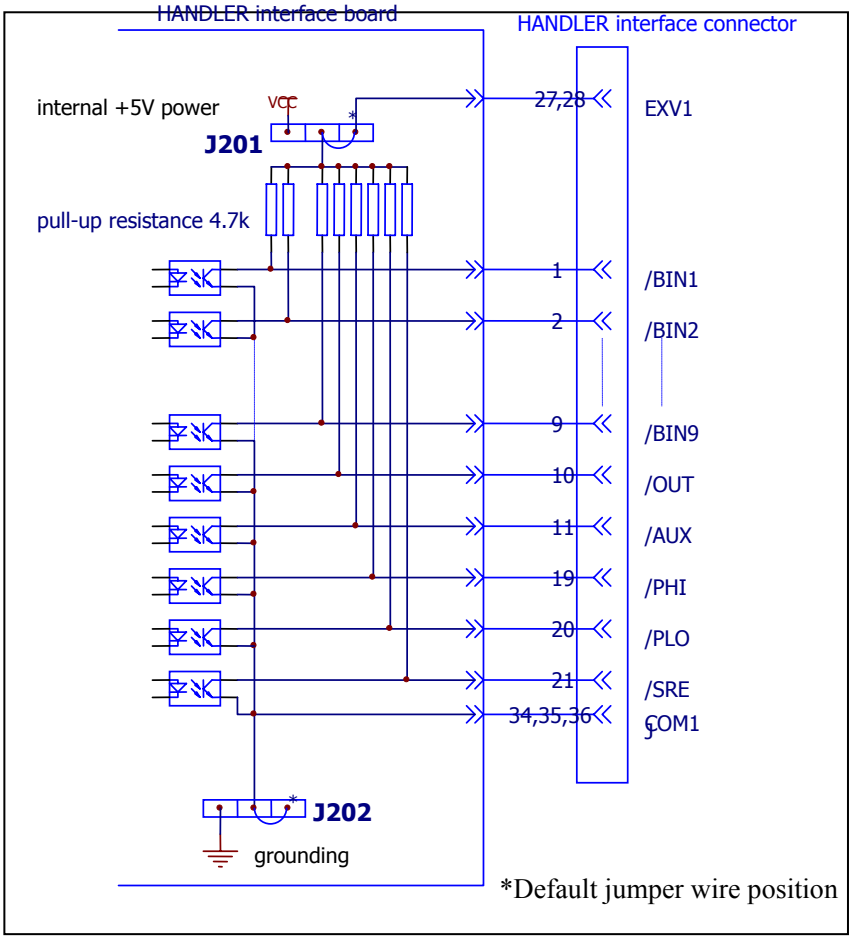

Figure 6-7 Simplified diagram of the sorting output signals

6.3.2 DC Isolated Input

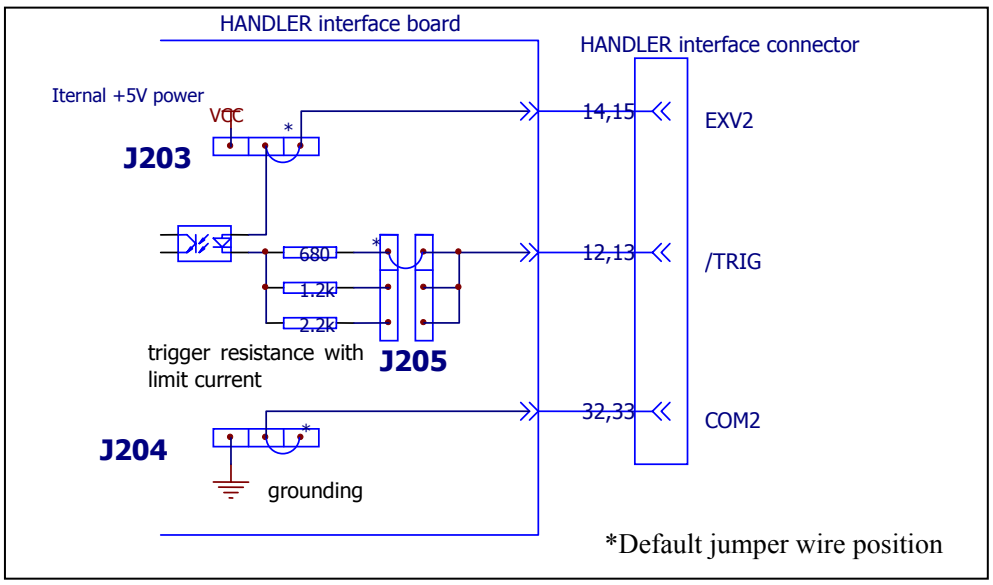

Figure 6-8 Simplified digram of HANDLER interface's trigger input signals

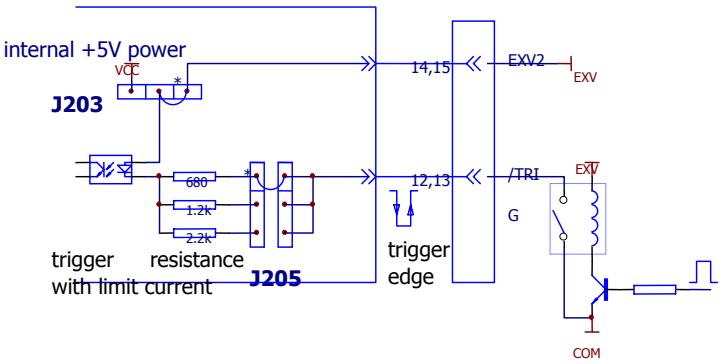

Figure 6-9 Relay to control trigger

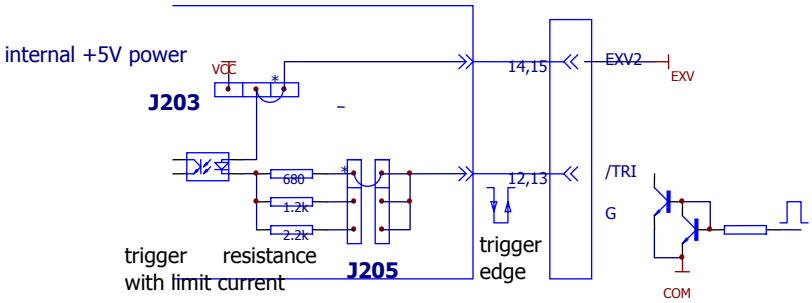

Figure 6-10 Reverser to drive and trigger signals

Chapter 7 Packing & Warranty

7.1 Packing

The contents are listed as follows:

Description	Quantity
1. TH2817B LCR Meter	1
2. TH26005 Test Fixture	1
3. TH26011 Kelvin Test Cable	1
4. TH26010 Shorting Plate	1
5. TH26038 Transformer Test Fixture	1
6. Three-Wire Power Cord	1
7. 1A Fuse	2
8. Operation Manual	1
9. Quality Certificate	1
10. Warranty Card	1
11. Test Report	1

Check the contents when you receive the instrument. If the contents are incomplete, if there is mechanical damage or defect, or if the instrument does not pass the power-on self-tests, please contact our company or business department immediately (IEEE488 interface is optional).

7.2 Warranty

This Tonghui instrument product is warranted against defects in material and workmanship for a period of two years from the date of shipment or purchase. During the warranty period, Tonghui will, at its option, either repair or replace the products which prove to be defective. And warranty card is required when the product needs repairing. And all Tonghui products are warranted for service of lifetime maintenance.

The foregoing warranty shall not apply to defects resulting from improper or inadequate maintenance by Buyer, Buyer-supplied software or interfacing, unauthorized modification or misuse, operation outside of the environmental specifications for the product, or improper site preparation or maintenance.