OPERATION MANUAL

TH2816A

Precision LCR Meter

TONGHUI (CHANGZHOU) Electronic Co., Ltd.

Version 1.0

www.tonghui.com.cn

Contents

Chapter 1 Overview 5
1.1 Product introduction 5
1.2 Operation conditions 6
1.2.1 Power requirements 6
1.2.2 Operation environment 6
1.2.3 Warm-up time 6
1.2.4 Notes for usage 6
1.3 Dimension and weight 7
1.4 Safety Summary 7
1.5 Electromagnetic compatibility 7
Chapter 2 Basic Specifications 8
2.1 Measurement Functions 8
2.1.1 Measurement Parameters 8
2.1.2 Combinations of Measurement Parameters 8
2.1.3 Equivalent Circuit 8
2.1.4 Ranging 9
2.1.5 Trigger 9
2.1.6 Delay Time 10
2.1.7 Measurement Terminals 10
2.1.8 Measurement Speed 10
2.1.9 Averaging 10
2.1.10 Basic Accuracy 10
2.2 Test Signal 10
2.2.1 Test Signal Frequency 10
2.2.2 Test signal level 10
2.2.3 Output impedance 11
2.2.4 Test Signal Level Monitor 11
2.2.5 Display Range 11
2.3 Functions 11
2.3.1 Correction Functions 11
2.3.2 Comparator function 11
2.3.3 List Sweep Function 12
2.3.4 Measurement results display 12
2.3.5 File Function 12
2.3.6 Other Function 12
2.3.6.1 Ranging mode 12
2.3.6.2 Contrast adjustment 12
2.3.6.3 Beep 12
2.3.6.4 Comparator alarm 13
2.3.6.5 Key lock function 13
2.3.6.6 Password 13
2.3.7 Interface Function 13
2.3.7.1 IEEE488 interface 13
2.3.7.2 RS232C interface 13
2.3.7.3 HANDLER interface 13
Chapter 3 Panel and Display Introduction 14
3.1 A Tour of the Front Panel 14
3.2 A Tour of the Rear Panel 15
3.3 Display Area Definition 16
3.4 MENU keys and Display Page 16
3.5 Summary of Pages 17
3.6 Diagram for All Pages 19
Chapter 4 Operation 22
4.1 Basic operation 22
4.2 Welcome Page 23
4.3 DISPLAY Menu 24

4.3.1 MeasDisplay Page 24
4.3.1.1 Measurement Function 25
4.3.1.2 Test Frequency 26
4.3.1.3 Oscillator Level 27
4.3.1.4 Measurement Range 28
4.3.1.5 Measurement Speed 29
4.3.1.6 Short Correction 29
4.3.1.7 Open Correction 30
4.3.1.8 File Management 30
4.3.1.9 Useful Tools 32
4.3.2 Bin Number Display Page 32
4.3.2.1 Comparator Function ON/OFF 33
4.3.2.2 Auxiliary Bin ON/OFF 34
4.3.2.3 File Management 35
4.3.2.4 Useful Tools 35
4.3.3 Bin Count Display Page 35
4.3.3.1 Counter ON/OFF 36
4.3.3.2 Comparator Function ON/OFF 37
4.3.3.3 Auxiliary Bin ON/OFF 37
4.3.3.4 File Management 37
4.3.3.5 Useful Tools 37
4.3.4 List Sweep Page 37
4.3.4.1 Sweep Mode of the List Sweep Measurement 38
4.3.4.2 File Management 39
4.3.4.3 Useful Tools 39
4.4 SETUP Menu 39
4.4.1 Meas Setup Page 40
4.4.1.1 Trigger Mode 42
4.4.1.2 Output Signal impedance 43
4.4.1.3 Delay Time (DELAY) 43
4.4.1.4 Averaging Rate (AVG) 43
4.4.1.5 Signal Level Monitor ON/OFF 43
4.4.1.6 Deviation Measurement Function 44
4.4.1.7 File Management 45
4.4.1.8 Useful Tools 45
4.4.2 User Correction 45
4.4.2.1 Open Correction 47
4.4.2.2 Short Correction 47
4.4.2.3 Load Correction 48
4.4.2.4 Measurement Function for LOAD Correction 50
4.4.3 Limit Table 50
4.4.3.1 Nominal Value for tolerance mode 51
4.4.3.2 Swap Parameter Function 52
4.4.3.3 Comparator Function's Limit Mode 52
4.4.3.4 Comparator Function ON/OFF 52
4.4.3.5 Auxiliary bin ON/OFF 52
4.4.3.6 Low/High Limit Value 52
4.4.3.7 File Management (File) 53
4.4.3.8 Useful Tools 53
4.4.4 List Setup 53
4.4.4.1 Sweep Parameter Selection 54
4.4.4.2 Sweep Mode 55
4.4.4.3 Sweep Points and Limit Mode 55
4.4.4.4 File Management 56
4.4.4.5 Useful Tools 56
4.5 SYSTEM Menu 56
4.5.1 System Configuration Page 56

4.5.1.1 LCD Contrast Function 57
4.5.1.2 Information Beeper Function ON/OFF 58
4.5.1.3 Comparator Alarm Function ON/OFF 58
4.5.1.4 Password Function 58
4.5.1.5 Bus Mode Function 59
4.5.1.6 GPIB address 59
4.5.1.7 Talk only mode ON/OFF 59
4.5.2 Files List Page 59
4.5.2.1 File Manage Function 60
4.5.3 Self test Page 61
4.5.4 DEBUG Page 61
Chapter 5 Remote Control 62
5.1 RS232C Interface Introduction 62
5.1.1 RS232C Connection 62
5.1.2 Communication with a Computer 63
5.1.3 Communication with a DC Bias Current Source 66
5.2 GPIB Interface Introduction 67
5.2.1 GPIB Connection 67
5.2.2 GPIB Interface Capabilities Functions 70
5.2.3 GPIB Addressing 70
5.2.4 GPIB Bus Function 70
5.3 Data Format 70
5.3.1 Format 1 71
5.3.2 Format 2 72
Chapter 6 Command Reference 73
6.1 Notation Conventions and Definitions 73
6.2 Command Structure 73
6.3 Command Abbreviations 75
6.4 Suffix Units and suffix Multipliers 75
6.5 Command Reference 76
6.5.1 DISPlay Subsystem 77
6.5.2 FREQuency Subsystem 78
6.5.3 VOLTage Subsystem 79
6.5.4 FUNCtion Subsystem 80
6.5.5 LIST Subsystem 84
6.5.6 APERture Subsystem 87
6.5.7 TRIGger Subsystem 87
6.5.8 FETCh? Subsystem 89
6.5.9 ABORt Subsystem 90
6.5.10 CORRection Subsystem 90
6.5.11 COMParator Subsystem 95
6.5.12 Mass MEMory Subsystem 100
6.5.13 Common Commands 101
6.5.14 Error and Warning Messages 102
Chapter 7 Handler Interface 103
7.1 Basic Information 103
7.2 Handler Interface Operation 103
7.2.1 Signal line definition 103
7.2.1.1 Signal Line Used for Comparator Function 103
7.2.1.2 Signal Line Used for List Sweep Comparator Function 107
7.3 Electrical Characteristics 111
7.3.1 DC Isolated Outputs 111
7.3.2 DC Isolated Input 113
7.4 Setting Up the Handler Interface Board 113
7.5 Operation 115
7.5.1 Setting Procedure For Comparator Function 115
7.5.2 Setting Procedure For List Sweep Comparator function 115

Chapter 1 Overview

Thank you for choosing our product. The contents of the shipment should be as listed in the packing list. If the contents are incomplete, if there is mechanical damage or defect, or if the instrument does not pass the power-on self tests, please notify our company.

1.1 Product introduction

TH2816A is a precision LCR meter with high accuracy, good stability, and wide measurement range. Controlled by a 16 bits MPU, TH2816A can be used for evaluating LCR components, materials and semiconductor devices over a wide range of frequencies (50 Hz to 200 kHz) and test signal levels (0.01 V to 2.00 V, with 0.01 V resolution). With its powerful function, excellent performance, perspicuous LCD display and easy menu operation, TH2816A is suitable for high speed measurement need on product line and high accuracy and stability measurement need in laboratory. By using the Handler interface, IEEE488 interface (optional), and RS232C interface, TH2816A can easily be used for automatic test system and computer remote control.

The instrument provides variable test conditions, typical conditions are as follows:

- Test signal frequency
  12,000 frequency points available from 50 Hz to 200 kHz.
- Test signal level
  Programmable signal level from 0.01 V to 2.00 V in 0.01 V resolution.
- Measurement speed
  Fast, Medium and Slow measurement speed can be selected. Using the averaging rate (from 1 to 255 programmable) function, you can get more stable measurement results.
- Constant signal source output impedance
  30 Ω or 100Ω selectable
- Bias current
  TH2816A can control the external bias current source (for example TH1773) for bias current list sweep measurement.
- Correction function
  The OPEN, SHORT correction for correcting the stray admittance, the residual impedance, and the other errors can be performed. The correction function has two kinds of correction methods. In one method the open and short correction can be performed at all of the frequency points, and in the other method the open, short correction can be performed at the frequency points you specify.
- Test signal level monitor
  The actual signal level may be different with the setup signal level. The level monitor function allows you to monitor the actual voltage level across the device under test or the actual current level though the device under test.
- List sweep function
  TH2816A's list sweep function permits entry of up to 4 frequencies, test signal levels, or bias current level points to be automatically measured

TH2816A provides 3 types of display results and 2 kinds of comparison methods

- Direct readout: The actual measurement results are displayed.
  Absolute deviation (ΔABS): The difference between the measured value of the DUT and a previously stored reference value are displayed.

Percent deviation (Δ%): The difference between the measured value of the DUT and a previously stored reference value are displayed as a percentage of the reference value.

- Absolute deviation or percent deviation can be set as comparison limits. TH2816A can output comparison results for sorting components into a maximum of 10 bins. (BIN1 to BIN 9 and OUT). Also, devices whose primary parameter is within limits, but whose secondary parameter measurement result is not within limits, can be sorted into an AUXiliary BIN.

TH2816A provides several communication interfaces which make it easy to output the measurement results to other equipments (for example computers), or build an automatic test system.

- RS232C interface: RS232C interface make it easy to communicate with other equipments. You can set the measurement functions and input the parameters through the RS232C interface instead of front panel keyboard.
  The RS232C interface can also be used as the control interface for the external bias current source.
- IEEE488 interface (optional): The IEEE488 interface is an optional interface on the TH2816A and can be used to build an automatic test system to completely characterize new components and materials, and to fully automate production line testing.
- HANDLER interface: By using the handler interface, the TH2816A can easily be combined with a component handler, and a system controller to fully automate component testing, sorting, and quality control data processing.

TH2816A's file function can save the setup parameters, limit parameters and list sweep parameters as a file in the internal nonvolatile memory, and the No. 0 file will be automatically reloaded when TH2816A is powered on.

1.2 Operation conditions

1.2.1 Power requirements

TH2816A requires the following power source:
Voltage: 198 to 242 Vac
Frequency: 47 to 66 Hz
Power: 50 VA maximum

1.2.2 Operation environment

TH2816A must be operated under within the following environment conditions.
Temperature：0℃ to 40℃
Humidity: less then 90% RH

1.2.3 Warm-up time

Allow TH2816A to warm up a minimum of 20 minutes before starting tests.

1.2.4 Notes for usage

- Please do not operate the instrument in the places where is vibrative, dusty, under direct sunlight, or where there is corrosive air.
- Although the instrument has been specially designed for reducing the noise cased by ac power, a place with low noise is still recommended. If this cannot be arranged, please make sure to use power filter for the instrument.
- Please store the instrument in the place where temperature is between 5℃ and 40℃, humidity is less then 85% RH. If the instrument will not be put in use for a time, please have it properly packed with its original box or a similar box for storing.

- TH2816A has the cooling fan on the rear panel and cooling holes on both sides. High temperature inside will decrease the measurement accuracy, so sufficient space must be kept around the TH2816A to avoid obstructing the air flow of the cooling fans.
- Don't frequently turn on and off the instrument, doing so will lead to the loss of the calibrated data and the data saved by users.

1.3 Dimension and weight

Dimensions: 350(W) by 110(H) by 340(D) (mm)
Weight: Approximately 4 kg

1.4 Safety Summary

The following general safety precautions must be observed during all phases of operation, service, and repair of this instrument.

Ground the Instrument
To avoid electric shock hazard, the instrument chassis and cabinet must be connected to a safety earth ground by the supplied power cable with earth blade.

DO NOT Operate In an Explosive Atmosphere
Do not operate the instrument in the presence of flammable gasses or fumes. Operation of any electrical instrument in such an environment constitutes a definite safety hazard.

Keep Away From Live Circuits
Operating personnel must not remove instrument covers. Component replacement and internal adjustments must be made by quailed maintenance personnel. Do not replace components with the power cable connected. Under certain conditions, dangerous voltages may exist even with the power cable removed. To avoid injuries, always disconnect power and discharge circuits before touching them.

DO NOT Service or Adjust Alone
Do not attempt internal service or adjustment unless another person, capable of rendering first aid and resuscitation, is present.

DO NOT Substitute Parts or Modify Instrument
Because of the danger of introducing additional hazards, do not install substitute parts or perform unauthorized modifications to the instrument. Return the instrument to our Sales and Service Office for service and repair to ensure that safety features are maintained.

1.5 Electromagnetic compatibility

This product has been designed and tested to the requirements of the Electromagnetic Compatibility (EMC) Directive. To use a properly shielded cable or shielded coaxial cable to connect each of the ports to their respective controllers, peripherals, equipments or devices may ensure to meet the requirements.

Chapter 2 Basic Specifications

2.1 Measurement Functions

2.1.1 Measurement Parameters

L: Inductance
C: Capacitance
R: Resistance
|Z|: Absolute value of impedance
X: Reactance
B: Susceptance
G: Conductance
D: Dissipation factor
θ: Phase angle
Q: Quality factor

2.1.2 Combinations of Measurement Parameters

Main parameters	Z	L	C	R	G
Secondary parameters	θ(deg), θ(rad)	Q,R_s,R_p	D, R_s, R_p	X	B

Suffix “s” means series; suffix “p” means parallel.

2.1.3 Equivalent Circuit

The actual capacitor, resistor and inductor are not the ideal capacitor, resistor and inductor. Normally, a component has the characteristics of the resistor and the reactor at the same time. The actual component is composed of an ideal resistor and reactor (ideal inductor or capacitor) in series or parallel equivalent circuits.
The values in the two different equivalent circuits can be converted to each other using the following formulas in Table 2-1. The values are different due to the quality factor Q (or the dissipation factor D).

Table 2-1 Parallel and Series Circuit Mode

Circuit Mode		Dissipation Factor	Conversion
C	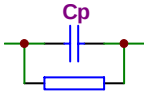	$D=\frac{1}{2\pi f C_p R_P}=\frac{1}{Q}$	$C_S=(1+D^2)C_P$ $R_S=R_P D^2/(1+D^2)$
		$D=2\pi f R_S C_S=\frac{1}{Q}$	$C_P=1/(1+D^2)C_S$ $R_P=R_S(1+D^2)/D^2$
L	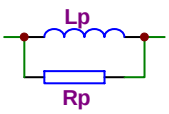	$D=\frac{2\pi f L_P}{R_P}=\frac{1}{Q}$	$L_S=1/(1+D^2)L_P$ $R_S=R_P D^2/(1+D^2)$

	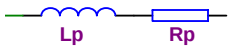	$D = \frac{R_S}{2\pi f L_S} = \frac{1}{Q}$	$L_P = (1+D^2)L_S$ $R_P = R_S(1+D^2)/D^2$

L: Inductor C: Capacitor f: Frequency
R: Resistor D: Dissipation factor Q: Quality factor
Suffix s: Series Suffix p: Parallel

The following description gives some practical guidelines for selecting the capacitance measurement circuit mode.

a) We can select the circuit mode according to the variation of D at two different frequencies. If the dissipation factor of a capacitor increases with the increase of the test frequency, series circuit mode should be selected. If the dissipation factor decreases with the increase of the test frequency, parallel circuit should be used. For inductor, the situation is just in the opposite side. In fact, D is impossible in direct ratio with the test frequency. From Figure 2-1, we can find that Rp and Rs exist at the same time. If Rs is more significant than Rp, series mode is selected; If Rp is more significant than Rs, parallel mode is more suitable.

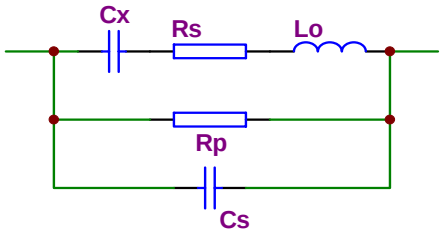

Figure 2-1. Equivalent circuit of an actual capacitor

Where,
Cx: ideal capacitor
Rx: resistance of the leads
Lo: inductance of the leads
Rp: insulation resistance across the capacitor
Co: stray capacitor across the capacitor.
For a given frequency F, Cs and Cp can be calculated.

b) When there is no proper information available, please make decision according to following rules:
   - For low impedance component（such as large capacitor or small inductor）, the series equivalent circuit mode should be used.
   - For high impedance component（such as small capacitor or large inductor）, the parallel equivalent circuit mode is the appropriate choice.
   - If a capacitor is used as a filter capacitor, series circuit mode is the best choice.
   - If a capacitor is used in a LC oscillator then parallel circuit mode can be selected.

2.1.4 Ranging

Auto and Manual (Hold/Up/Down), total 9 ranges.

2.1.5 Trigger

TH2816A has four trigger modes: INTernal, EXTernal, MANual, and BUS. Except for BUS trigger mode these trigger modes can be set on the front panel. The BUS trigger mode is used when TH2816A is controlled via GPIB.

Internal: When the trigger mode is set to INTernal trigger mode, TH2816A continuously repeats measurements.

External: When the trigger mode is set to EXTernal, TH2816A performs a single measurement every time a low-to-high transition TTL level signal is applied to the Handler interface on the rear panel.

BUS: When the trigger mode is set to BUS trigger mode, TH2816A performs a single measurement every time the *TRG common command is sent to TH2816A via GPIB. The BUS trigger mode cannot be set on the front panel. Send the TRIGger:SOURce BUS command via GPIB or RS232C to set the trigger mode to the BUS trigger mode.

Manual: When the trigger mode is set to MANual trigger mode, TH2816A performs a single measurement every time when TRIGGER key on the front panel is pressed.

2.1.6 Delay Time

Programmable delay from the trigger command to the start of the measurement, 0 to 60.000 s in 1 ms steps.

2.1.7 Measurement Terminals

Four terminals:
HD (H_{CUR}): High current
HS (H_{POT}): High potential
LS (L_{POT}): Low potential
LD (L_{CUR}): Low current

2.1.8 Measurement Speed

TH2816A's measurement speed is determined by Integration time, measurement result display time, averaging rate and delay time.
FAST: about 25 meas/sec, maximum 30 meas/sec.
MED: about 10 meas/sec.
SLOW: about 1.5 meas/sec.

2.1.9 Averaging

1 to 255, programmable

2.1.10 Basic Accuracy

0.05%

2.2 Test Signal

2.2.1 Test Signal Frequency

Total 12,000 frequency points available from 50Hz to 200kHz
When 50Hz≤f<20kHz, f=6×10P5P/N (N is natural number between 0 an 12,000);
When 20kHz≤f<100kHz, f=1.2×10P6P/N (N is natural number between 12 an 60);
When 100kHz≤f≤200kHz, f=2.4×10P6P/N (N is natural number between 12 an 24);
Frequency Accuracy: 0.02%

2.2.2 Test signal level

0.01 V to 2.00 V, 0.01 V resolution
Level accuracy: ±(10%×setup value+2 mV)

2.2.3 Output impedance

30Ω±5% (default), 100Ω±5%

2.2.4 Test Signal Level Monitor

Mode	Range	Monitor Accuracy
Voltage	10 mV_{rms} – 2.00 V_{rms} 0.01 mV_{rms} –10 mV_{rms}	±(3% of reading+0.5mV) ±(12% of reading+0.1mV)
Current	100μA_{rms} – 66mA_{rms} 0.001μA_{rms} – 100 μA_{rms}	±(3% of reading+5μA) ±(12% of reading+1μA)

2.2.5 Display Range

Parameter	Range
L	0.01 nH to 9999.99 H
C	0.00001 pF to 999.999 mF
R, X, Z	0.01 mΩ to 99.9999 MΩ
B, G	0.01 nS to 999.999 S
D	0.00001 to 9.99999
Q	0.01 to 99999.9
θ	Deg -179.999° to 179.999° Rad -3.14159 to 3.14159
%	-99.999% to 999.999%

2.3 Functions

2.3.1 Correction Functions

- Open correction
  Eliminates measurement errors due to parasitic stray admittance (C, G) of the test fixture. Three frequency points or sweep frequency Open correction is available.
- Short correction
  Eliminates measurement errors due to parasitic residual impedances (L, R) of the test fixture. Three frequency points or sweep frequency Short correction is available.
- Load correction
  Improves the measurement accuracy by using a device which value is accurately known (a working standard) as a reference. Three frequency points load correction is available.

2.3.2 Comparator function

10-bin sorting for the primary measurement parameter, and IN/ OUT decision output for the secondary measurement parameter.

BIN1 to BIN9: Both primary and secondary measurement parameters are within limits.

OUT BIN: Primary parameter is not within limits. Or primary parameter is within limits, secondary parameter is not within limits, and AUX bin is off.

AUX BIN: Primary parameter is within limits, but whose secondary parameter measurement result is not within limits.

If the secondary parameter limits are not set, TH2816A will not compare the secondary parameter.

- Sorting Modes
  Absolute deviation mode: absolute deviations are compared with bin limits.
  Percent deviation mode: percent deviations are compared with bin limits.
- Bin Count
  Each bin has a bin counter, counts from 0 to 999999.

- Display pages
  BinNo. Disp page and ***Bin Count*** page

More detail information is outputted through the Handler interface:
PHI: Primary measurement parameter is high.
PLO: Primary measurement parameter is low.
SREJ: Secondary measurement parameter is rejected.

2.3.3 List Sweep Function

- TH2816A permits up to 4 frequencies, oscillator levels to be automatically measured.
- TH2816A permits up to 4 DC bias current points to be automatically measured.
- List sweep comparator: Each sweep point has the high and low limits and HI, IN or LOW comparison result will be outputted for each sweep point. Only the absolute value can be inputted as the limits and nominal value is not required.

2.3.4 Measurement results display

- Measurement results can be displayed in large characters or normal characters.
- Measurement results display mode
  1) Direct readout: The actual measurement values are displayed.
  2) Δ ABS: The difference between the measured value of the DUT and a previously stored reference value are displayed
  3) Δ %: The difference between the measured value of the DUT and a previously stored reference value are displayed as a percentage of the reference value.
- Primary and secondary parameters are displayed with 6 digits resolution.
- Fixed decimal point function is used to display the measurement data using a fixed point display format. This function can also be used to change the number of digits displayed.

2.3.5 File Function

Control settings, comparator high and low limits and list sweep parameters etc. can be stored and retrieved as a file in the non-volatile memory. Users don't have to set the parameters for the instrument every time. A maximum of 12 sets of instrument control settings can be stored in the internal non-volatile memory.
TH2816A will reload the No. 0 file every time when the instrument is turned on. So users can save the control settings in file No. 0 for convenience.

2.3.6 Other Function

2.3.6.1 Ranging mode

When the measurement range is set to AUTO, TH2816A automatically selects the appropriate range according to the DUT's impedance, test frequency, and oscillator level.
When the measurement range is set to the HOLD mode, the impedance range is fixed at the current range setting, and the impedance range name is displayed in the ***RANGE*** field.

2.3.6.2 Contrast adjustment

Contrast function allows you to adjust the LCD's contrast value from 1 to 31.

2.3.6.3 Beep

You can turn on or turn off the internal beep.

2.3.6.4 Comparator alarm

You can select a comparator alarm status from IN, OUT, AUX and OFF.

2.3.6.5 Key lock function

TH2816A has keyboard lock-out capability that disables all front panel operation except for softkey KEY. This is useful when you don't want the control settings changed.

2.3.6.6 Password

If the password function is set to ON, you are required to input the correct password in order to turn on the TH2816A, or unlock the keyboard.
Password is composed of the digits 0 to 9.
Factory default password: **2816**

2.3.7 Interface Function

2.3.7.1 IEEE488 interface

IEEE488 interface is also called as GPIB interface, and equal to IEC625 interface (only with different connector). The programming language is SCPI. All commands and data are transmitted using ASCII codes over the bus.
Interface Functions：SH1, AH1, T5, L4, SR1, RL1, DC1, DT1, C0, E1
Compatible with IEEE-488.1 and 488.2

2.3.7.2 RS232C interface

Baud rate: fixed 9600 bps
Signal logical level: ±8V
Maximum transmission distance: 15 m
The programming language is SCPI. All commands and data are transmitted using ASCII codes over the bus.

2.3.7.3 HANDLER interface

TH2816A can receive the Trigger signal and output the comparison results and list sweep comparison results through the HANDLER interface.
Synchronous signal IDX and EOM can be outputted.
The output signals are logical low active and opto-isolated.
TH2816A's outputs have pull-up resistors on the handler interface board. External source is used as the default power supply.

Chapter 3 Panel and Display Introduction

This chapter provides information including a tour of the front panel and display area definition, which will help you to quickly learn how to operate the TH2816A. For more information, please refer to chapter 4.

3.1 A Tour of the Front Panel

Figure 3-1 shows the brief description of key on the TH2816A's front panel.

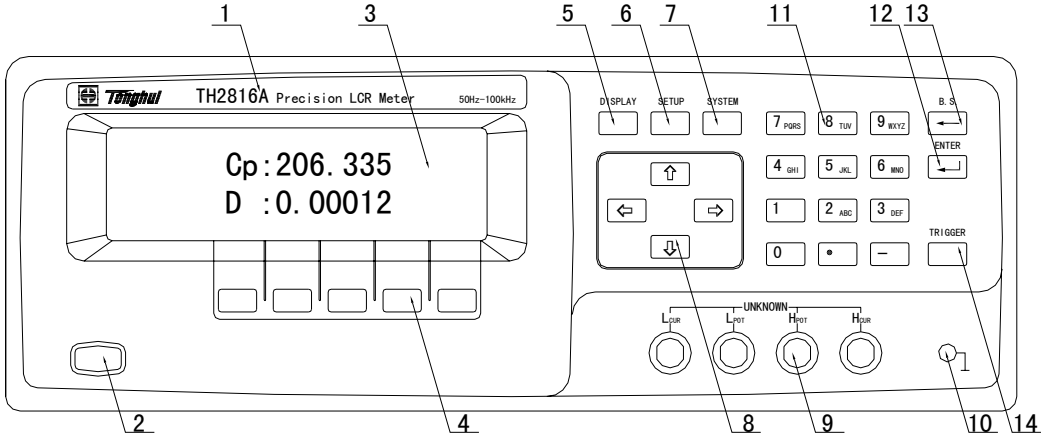

Figure 3-1. Front panel overview

1) Brand and Model
   The registered brand of our company and model of the instrument are printed.
2) Power on/off
   Power on/off switch. In the "ON" position all operating voltages are applied to the instrument. In the "OFF" position NO operating voltages are applied to the instrument.
3) LCD
   240×64 dot-matrix Liquid Crystal Display (LCD) displays measurement results, test conditions, etc.
4) SOFTKEYs
   The five keys' functions are not fixed, they have different functions in different menus. Five softkeys are used to select control and parameter functions. Current function of each softkey is displayed in the softkey area at the bottom of LCD.
5) DISPLAY menu key
   Press DISPLAY menu key to enter the ***Meas Display*** page.
6) SETUP menu key
   Press SETUP menu key to enter the ***Meas Setup*** page.
7) SYSTEM menu key
   Press SYSTEM menu key to enter the ***System Config*** page.
8) Cursor keys
   The CURSOR arrow keys are used to move the field select cursor from field to field on the LCD display page. When the cursor is moved to a field the field changes to an inverse video image of the original field.
9) Unknown terminals
   These are the UNKNOWN Terminals used to connect a four-terminal pair test fixture or test leads for measuring the device under test.

HD(H_{CUR}): High current drive
HS(H_{POT}): High potential sense
LS(L_{POT}): Low potential sense
LD(L_{CUR}): Low current drive

10) Frame terminal
This is the FRAME Terminal which is tied to the instrument's chassis and which can be used for measurements that require guarding.

11) Number keys
The NUMBER keys are composed of the digits 0 to 9 , a period . , a minus sign - , number keys are used to enter numeric data into the TH2816A.

12) ENTER key
ENTER terminates numeric input data and enters the displayed value in the input window.

13) B.S. key
BACKSPACE key deletes one last character of the input value.

14) TRIGGER key
This is the TRIGGER key used to manually trigger the TH2816A when it is set to the Manual Trigger mode.

3.2 A Tour of the Rear Panel

Figure 3-2 gives a brief description of the TH2816A's rear panel.

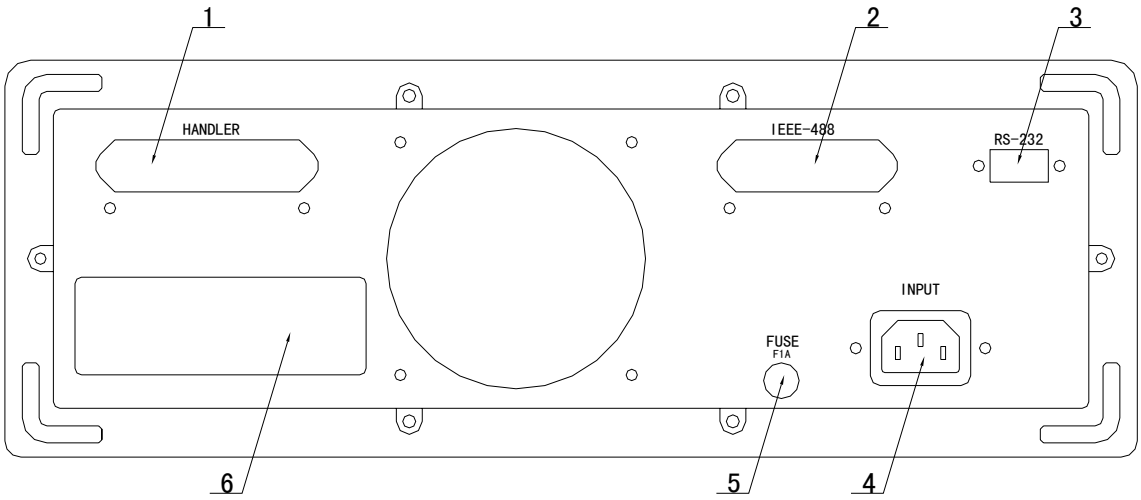

Figure 3-2. Rear panel overview

1) HANDLER Interface Connector
This is the HANDLER interface connector used when operation with a component handler to fully automate component testing, sorting, and quality control data processing.

2) IEEE488 Interface Connector (Optional)
This is the IEEE488 interface connector used when operating on the General Purpose Interface Bus.

3) RS232C Interface Connector
This is the RS232C interface connector used when operating on the serial interface.

4) LINE Input Receptacle
AC power cord receptacle.

5) Fuse Holder
Fuse holder for TH2816A line fuse, 220Vac, 1A.
6) Name Plate
Name Plate is used to provide the information of date, model, lot number and manufacturer etc.

3.3 Display Area Definition

The display area on the LCD is divided into the areas show in Figure 3-3.

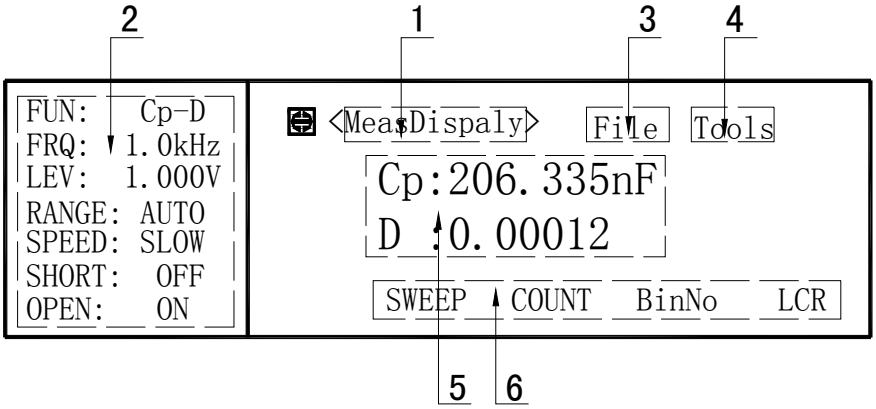

Figure 3-3. Display Area Definition

1) Display Page Area
This is the display page area. This area identifies the current display page.
2) Measurement Conditions area
This area is where measurement conditions are displayed.
3) File Menu Field
When the cursor is set on the ***File*** field, common file functions which are not displayed on the display pages (for example, LOAD/Save function) are made available.
4) Tools Menu Field
Some special controls which cannot be set on a display page's fields are made available.
5) Measurement Date Area
This area is where measurement results are displayed.
6) Softkey Area
The bottom line is reserved for softkey labels. The softkeys displayed correspond to the field at the cursor's position on the LCD.

3.4 MENU keys and Display Page

TH2816A has three MENU keys which are used to define the LCD display page. Each MENU key has three or four display pages as follows.

1) DISPLAY MENU key
This MENU key has the following 4 pages.
- ***MeasDisplay***
- ***BinNo. Disp***
- ***Bin Count***
- ***List Sweep***

These display pages are used for displaying measurement and sorting results. Some controls for each display page can be set from the display page. Only from the above display pages can the TH2816A measure a DUT. When DISPLAY menu key is pressed, the ***MeasDisplay*** page will be displayed on the LCD screen, and the softkeys used to select the other three pages will be displayed. The CURSOR will be positioned at the ***MeasDisplay*** field. The power-on default

display page is the ***MeasDisplay*** page.

2) SETUP MENU key
This MENU key has the following 4 pages.
- ***Meas Setup***
- ***User Correction***
- ***Limit Table***
- ***List Setup***

These display pages are used for setting measurement conditions (including the correction function), or setting bin sorting limits. When one of these display pages is being displayed, TH2816A stops the measurement and bin sorting judgments. (TH2816A measures the DUT and performs the bin judgments only from the display pages under DISPLAY menu.) When SETUP is pressed, the ***Meas Setup*** page is displayed and the softkeys to select the other three pages are displayed. The cursor will be positioned at the ***Meas Setup*** field.

3) SYSTEM MENU key
This MENU key has the following 4 pages.
- ***System Config***
- ***File List***
- ***Self Test***
- ***Debug***

These display pages are used to control functions which are not related to the main measurement controls. When SYSTEM menu key is pressed, the ***System Config*** page will be displayed, and the softkeys to select the other three pages are displayed. The cursor will be positioned at the ***System Config*** field.

Note: ***Self Test*** and ***Debug*** pages are not available for users.

3.5 Summary of Pages

MeasDisplay
This display page provides the measurement result information, and some control settings are entered from this page. TH2816A measures the DUT from this page, and displays the measurement results in large or normal size characters. This display page is the default display page when TH2816A is turned on.

BinNo. Disp
This display page provides the bin sorting result information, the measurement results, and comparator function on/off settings. The TH2816A measures the DUT from this page. The bin number is displayed in large characters, and the measurement results are displayed in normal size characters.

Bin Count
This display page provides the limit table's conditions, and the comparator's bin counter results. The TH2816A can measure the DUT from this page, but the measurement results will not be displayed.

List Sweep
This display page provides the list sweep measurement results, and selection of the sweep mode (STEP/SEQ). The TH2816A measures the DUT according to the list sweep conditions in the ***List Setup*** page. The current measuring point in the list sweep points is displayed in an inverse video image of the original field. The list sweep point cannot be set from this page. You must use the ***List Setup*** page to set the list sweep points.

Meas Setup
This display page provides all of the measurement control settings. TH2816A

can not perform a measurement from this page, and the measurement result can not be displayed on this page. When you want to measure the DUT using the control settings on this page, use one of the display pages from DISPLAY menu key.

User Correction
This display page provides the correction function. The correction function should be used to measure the DUT accurately. OPEN/SHORT correction, OPEN/SHORT/LOAD correction are available in this page. TH2816A can not perform a measurement from this page, and the measurement result can not be displayed on this page.

Limit Table
This display page provides the limit table settings for bin sorting. TH2816A doesn't perform measurement from this page. To see the comparison results, either the ***BinNo. Disp*** page or the ***Bin Count*** page should be used.

List Setup
This display page provides the control settings for the List Sweep measurement function. TH2816A doesn't measure the DUT from this page. To measure the DUT using the list sweep function, the ***List Sweep*** page should be used.

System Config
This display page provides the system information and control settings, such as LCD contrast adjustment, PASSWORD, and GPIB ADDRESS etc.

File List
This display page provides the file list information including file name, maximum files, used files etc. You can load, rename and delete a file from this page.

Self Test
This display page cannot be used by users.

System Debug
This display page cannot be used by users.

3.6 Diagram for All Pages

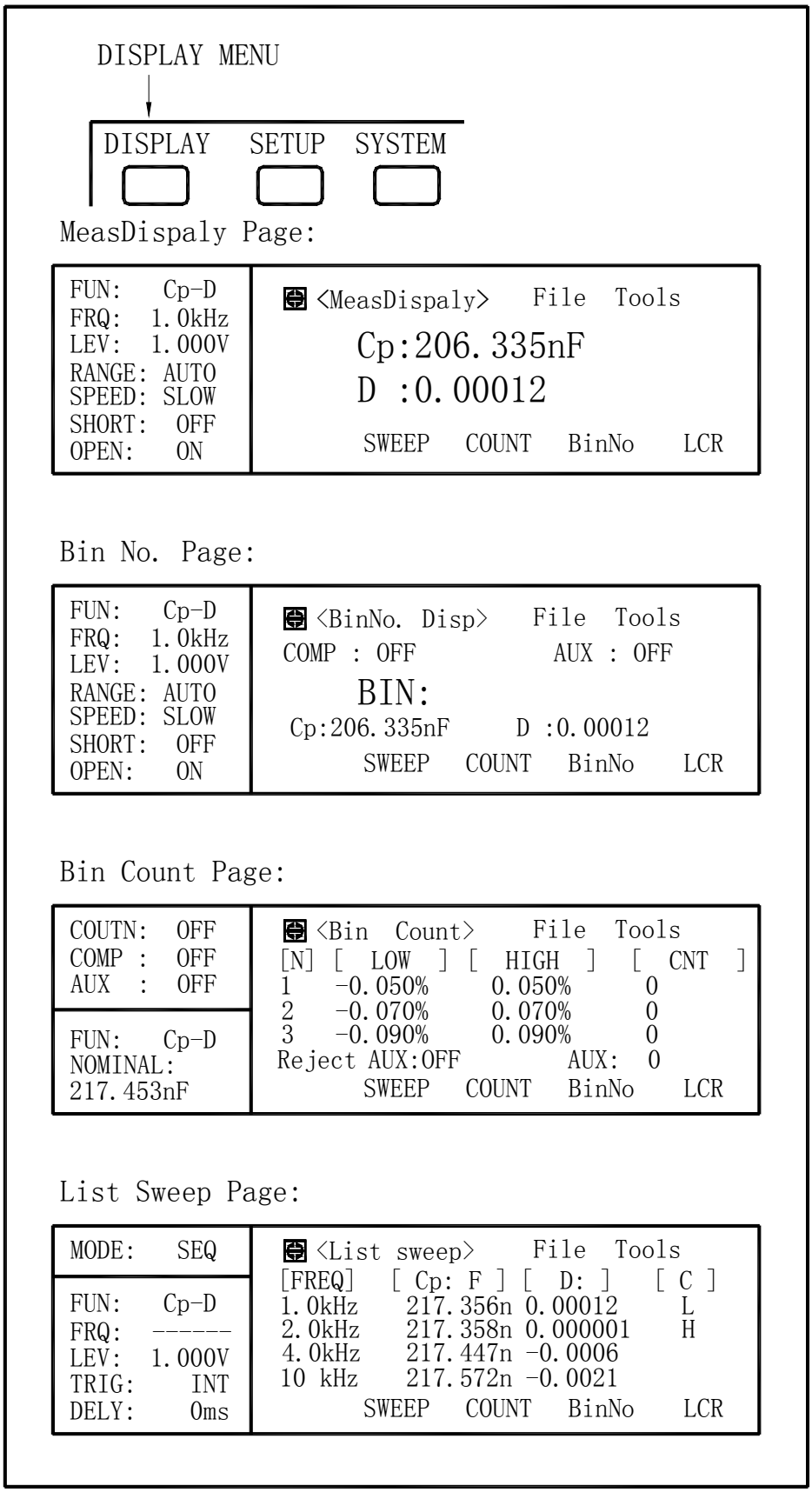

Figure 3-4 Display Pages (1/3)

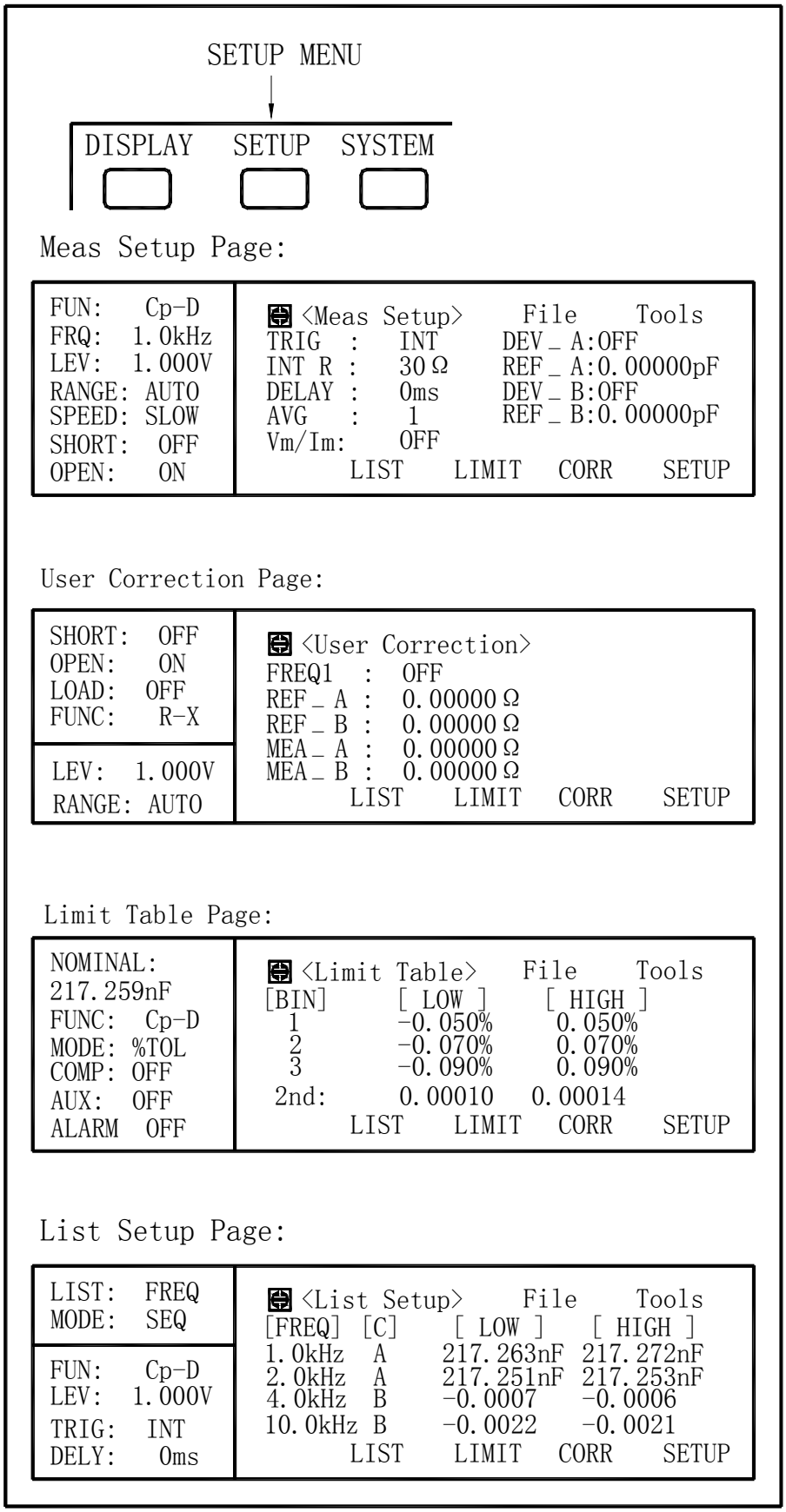

Figure 3-4. Display Pages (2/3)

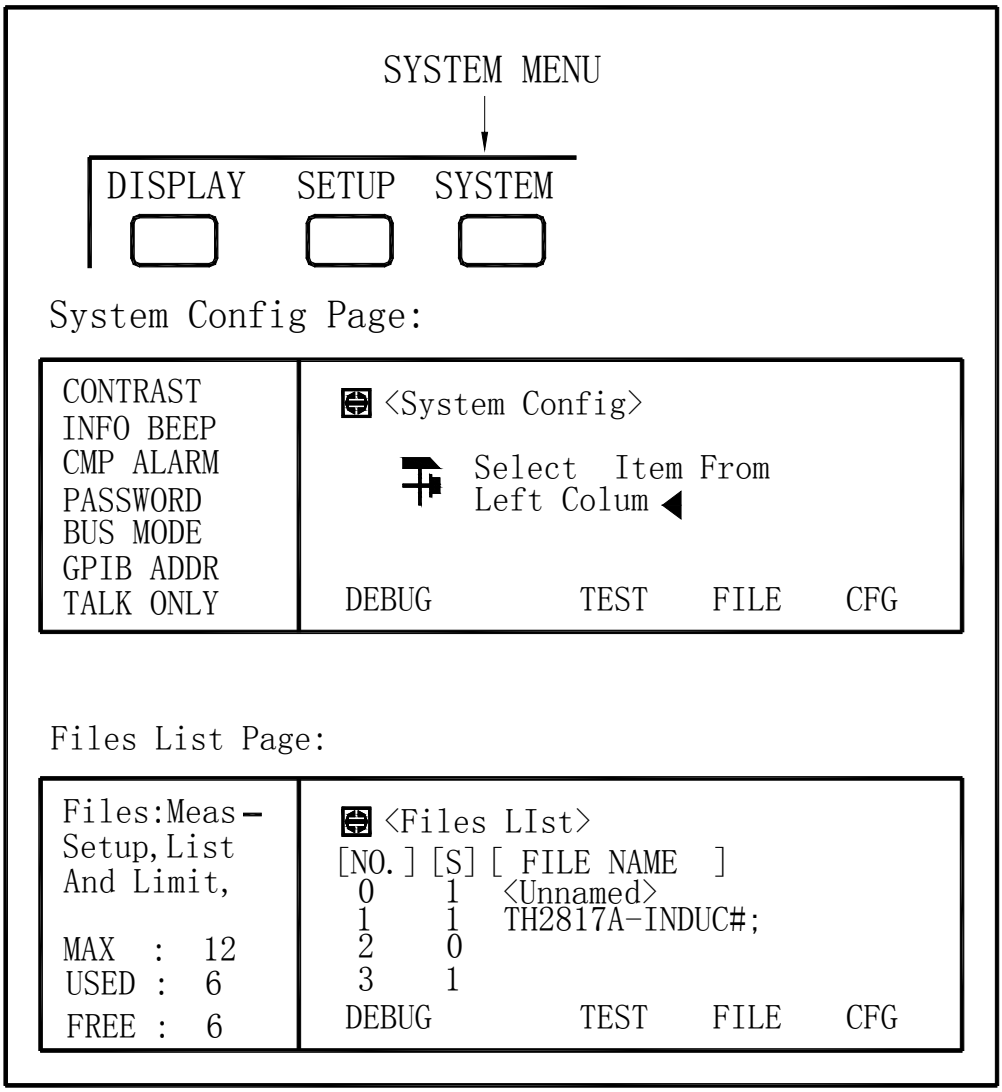

Figure 3-4 Display Pages (3/3)

Chapter 4 Operation

4.1 Basic operation

TH2816A's basic operation is described in the following paragraphs.

- Display the desired display page using the MENU keys and the softkeys. (Refer to Figure 3-4.)
- Move the CURSOR to the field to be used using the CURSOR keys. The cursor will be an inverse video marker, and the field is an area at which you can set the CURSOR. (Refer to Figure 4-1.)

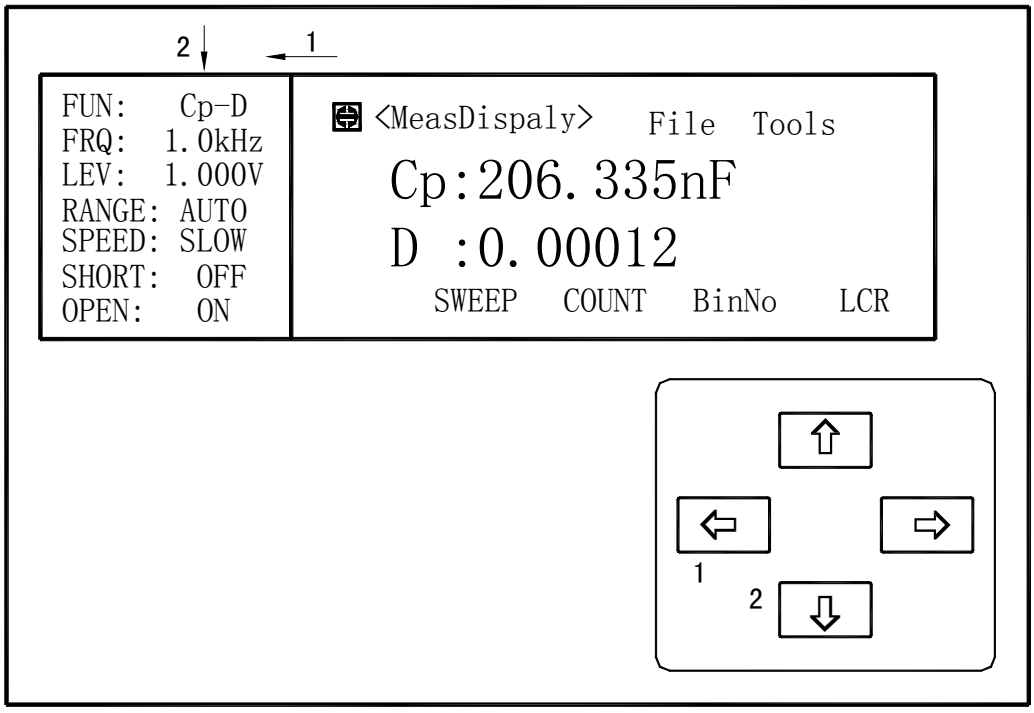

Figure 4-1. CURSOR Keys and Field Operation Example

- The softkeys corresponding to the field pointed to by the CURSOR will be displayed. Select and press a softkey. The numeric entry keys and ENTER are used to enter numeric data. (Refer to Figure 4-2.)
  When one of the numeric entry keys is pressed, the softkeys will change to the available unit softkeys. You can use these unit softkeys instead of ENTER. When ENTER is used, the numeric data is entered with Hz, V, or A as the default unit depending on the cursor field selected, for example, the test frequency's unit will be Hz, etc.

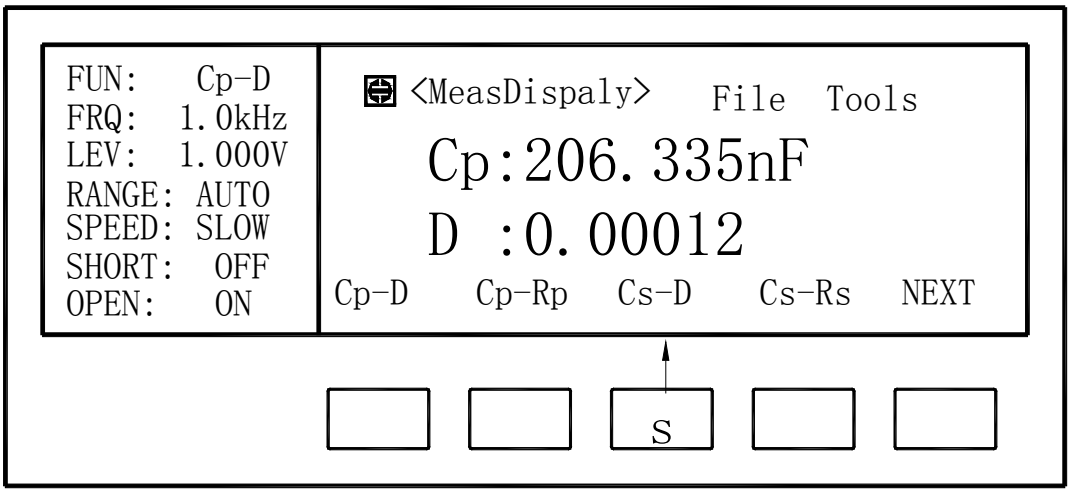

Figure 4-2. Softkey Selection Example

4.2 Welcome Page

Press the power switch to turn on TH2816A, the welcome page will display as shown in Figure 4-3. The name of the instrument with its version will also be displayed. If password function is ON, you must input the correct password to start the instrument. If you input a wrong password for three times, the instrument will be locked. You must turn off the power and then turn on the power again in order to try another password. (Refer to Figure 4-4



Figure 4-3. Welcome Page

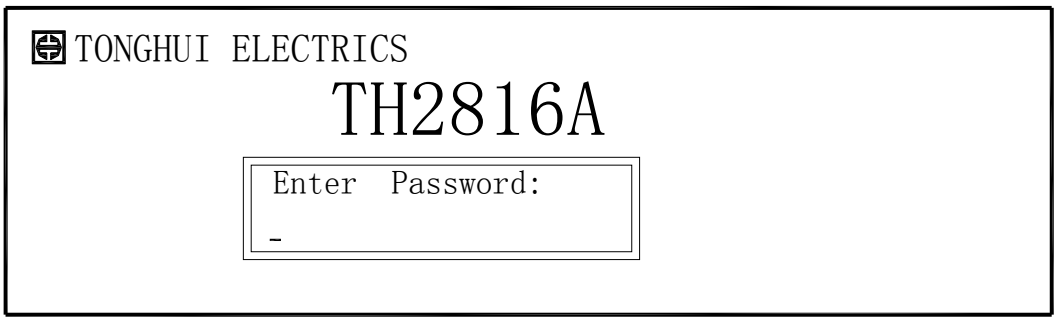

Figure 4-4. Input the Password

Note: TH2816A's factory default password is "2817".

4.3 DISPLAY Menu

This Chapter provides information about the function of each page of DISPLAY menu. The following four display pages can be called from DISPLAY menu.

- ***MeasDisplay***
- ***BinNo. Disp***
- ***Bin Count***
- ***List Sweep***

This Chapter describes the functions on each page in the order of the preceding list.

4.3.1 MeasDisplay Page

When you press DISPLAY, the ***MeasDisplay*** page will be displayed. On this page, the measurement results are displayed in large characters, and the following measurement controls can be set from this page. (The field in parenthesis is used to set the control function.)

- Measurement Function (***FUN***)
- Test Frequency (***FRQ***)
- Oscillator Level (***LEV***)
- Measurement Range (***RANGE***)
- Measurement Speed (***SPEED***)
- Short Correction (***SHORT***)
- Open Correction (***OPEN***)
- File Management (***File***)
- Useful Tools (***Tools***)

There are ten fields on this page: ***<MeasDisplay>***, ***FUN***, ***FRE***, ***LEV***, ***RANGE***, ***SPEED***, ***SHORT***, ***OPEN***, ***File*** and ***Tools***. Each control function is described in the following paragraphs.

This page also provides the oscillator level voltage/current monitor value information in monitor areas on the displayed page. These conditions can be set from the ***Meas Setup*** page.
The available fields and the softkeys which correspond to the fields on this page are shown in Figure 4-5 and Figure 4-6 respectively.

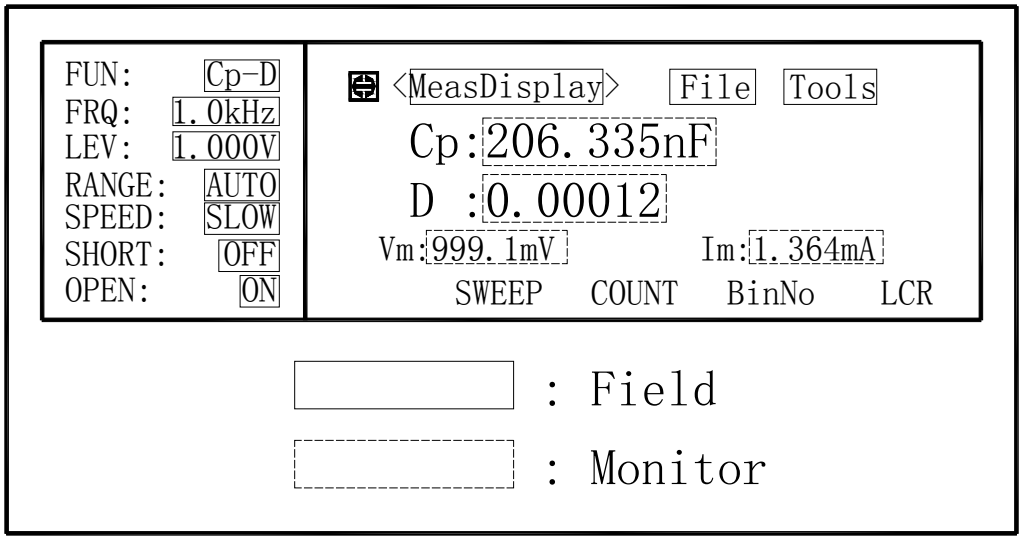

Figure 4-5. Available Fields on the MeasDisplay Page

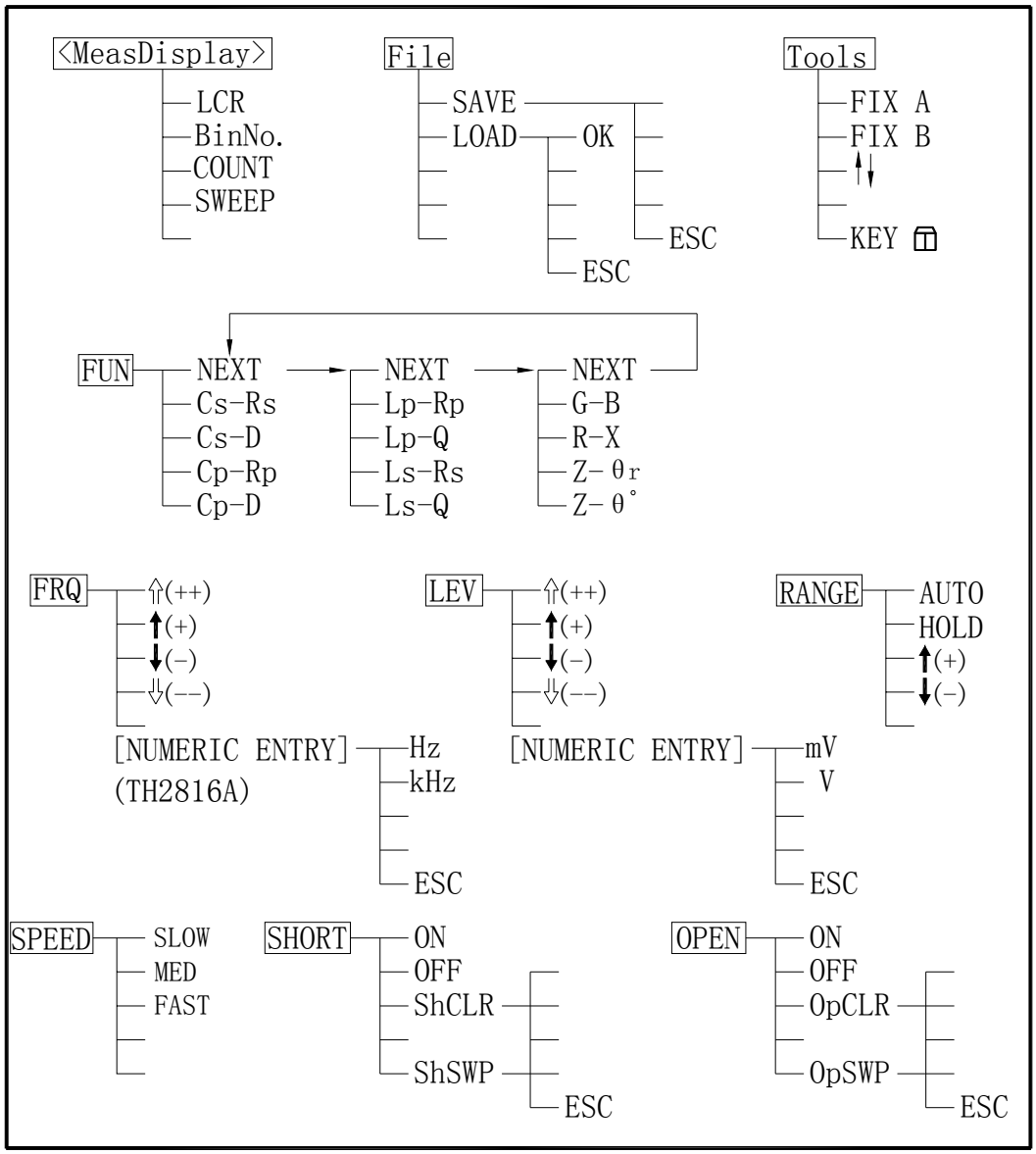

Figure 4-6. Available Softkeys on the MeasDisplay Page

4.3.1.1 Measurement Function

TH2816A measures two components of the complex impedance (parameters) at the same time in a measurement cycle. The measurement parameters are listed as follows.

- Primary Parameters
  - |Z| (absolute value of impedance)
  - L (inductance)
  - C (capacitance)
  - R (resistance)
  - G (conductance)

- Secondary Parameters
  - D (dissipation factor)
  - Q (quality factor)

Rs (equivalent series resistance)
Rp (equivalent parallel resistance)
X (reactance)
B (susceptance)
Θ (phase angle)

The primary parameter measurement result is located on the upper line as two large character lines on this page, and the secondary parameter measurement result is located on the lower line as two large character lines on this page.

The combinations of primary and secondary parameters, including the equivalent parallel and serial combinations, are listed in Table 4-1.

Table 4-1. Measurement Function

Primary Parameter	Serial Mode	Parallel Mode
Z	Z-Θr Z-Θ°	
C	Cs-D Cs-Rs	Cp-D Cp-Rp
L	Ls-Q Ls-Rs	Lp-Q Lp-Rp
R	R-X	
G		G-B

Front Panel Operation for Setting the Measurement Function

Perform the following steps to set the measurement function.

1) Use the CURSOR arrow keys to move the cursor to the ***FUN*** field. The following softkeys will be displayed.
   - Cp-D
   - Cp-Rp
   - Cs-D
   - Cs-Rs
   - NEXT
2) Select and press a softkey to set the measurement function. If the softkey you want is not displayed, press NEXT to display the following set of softkeys.
   - Ls-Q
   - Ls-Rs
   - Lp-Q
   - Lp-Rp
   - NEXT
3) Select and press a softkey to set the measurement function. If the softkey you want is not displayed, press NEXT to display the following set of softkeys.
   - Z-Θ°
   - Z-Θr
   - R-X
   - G-B
   - NEXT
4) Select and press a softkey to set the measurement function. When NEXT is pressed, the softkeys shown in step 1 will be displayed. Retry steps 1 through 4 if you missed the function you were looking for.

4.3.1.2 Test Frequency

TH2816A operates from 50 Hz to 200 kHz with 12,000 frequency points. 37 typical frequencies can be selected through softkeys, and the other frequencies can be set through numeric entry keys.

Front Panel Operation for Setting the Test Frequency

Perform the following steps to set the test frequency.

1) Move the CURSOR to the ***FRQ*** field. The following softkeys will be displayed.

- ⇓(--)

  This softkey is the coarse frequency decrement softkey which is used to decrease the test frequency to the next sequentially lower tenth value after 50 Hz. The frequency points set using this softkey are as follows.

  50 Hz 100 Hz 1.0 kHz 10 kHz 100 kHz 200 kHz

- ↓(-)

  This softkey is the fine frequency decrement softkey used to decrease the test frequency to the next sequentially lower frequency point. The sequential frequency points which can be set using this softkey are as follows.

  50Hz 60Hz 80Hz 100Hz 120Hz 150Hz 200Hz 250Hz
  300Hz 400Hz 500Hz 600Hz 800Hz 1kHz 1.2kHz 1.5kHz
  2kHz 2.5kHz 3kHz 4kHz 5kHz 6kHz 8kHz 10kz
  12kHz 15kHz 20kHz 25kHz 30kHz 40kHz 50kHz 60kHz
  80kHz 100kHz 120kHz 150kHz 200kHz

  If the input frequency is not the one supported by TH2816A, the TH2816A will automatically modify to the frequency point which is the nearest higher point.

- ↑(+)

  This softkey is the fine frequency increment softkey used to increase the current test frequency to the next sequentially higher frequency point. The frequency points set using this softkey are the same values as set using ↓(-).

- ⇑(++)

  This softkey is the coarse frequency increment softkey used to increment the test frequency to the next sequentially higher tenfold value after 50 Hz. The frequency points set using this softkey are the same as the frequency points set using ⇓(--).

4.3.1.3 Oscillator Level

TH2816A's oscillator level can be set as the effective value (RMS value) of a sine wave of the test frequency from TH2816A's internal oscillator. The oscillator level can be set from 0 V_{rms} to 2.00 V_{rms} with a 0.01 V_{rms} resolution. The output impedance can be selected either 30Ω or 100Ω.

Note: The set value of the oscillator voltage level is the value set when the measurement contacts (UNKNOWN Terminals) are opened.

Front Panel Operation for Setting the Oscillator Level

There are two ways to set the oscillator level. One is to use the softkeys, and the other is to use the use the numeric entry keys.

Perform the following steps to set the oscillator level.

1) Move the cursor to the ***LEV*** field. The following softkeys will be displayed.

- ⇓(--)

  This softkey is the coarse level decrement softkey which is used to decrease the test signal level by a 0.1 V_{rms} step.

- ↓(-)

  This softkey is the fine level decrement softkey which is used to decrease the test signal level by a 0.01 V_{rms} step.

- ↑(+)

This softkey is the fine level increment softkey which is used to increase the test signal level by a 0.01 V_{rms} step.

- ⇑(++)
  This softkey is the coarse level increment softkey which is used to increase the test signal level by a 0.01 V_{rms} step.

2) Select and set the oscillator level using either the softkeys or the numeric entry keys. When the oscillator level is entered using the numeric entry keys, the softkey labels are changed to the available units labels (mV, V), and you can use these softkeys to enter the units and enter the data instead of ENTER. When ENTER is used, the numeric data is entered with V as the default unit.

4.3.1.4 Measurement Range

TH2816A has nine measurement ranges: 10 Ω, 30 Ω, 100 Ω, 300 Ω, 1 kΩ, 3 kΩ, 10 kΩ, 30 kΩ, and 100 kΩ. The measurement range is selected according to the DUT's impedance even if measurement parameter is capacitance or inductance. Table 4-2 shows the effective measuring range for each measurement range while in the impedance mode (|Z|, R, X).

Table 4-2. Measurement Range for Each Range

RANGE	MEASUREMENT RANGE
10 Ω	0 Ω to 10 Ω
30 Ω	10 Ω to 100 Ω
100 Ω	100 Ω to 316 Ω
300 Ω	316 Ω to 1 kΩ
1 kΩ	1 kΩ to 3.16 kΩ
3 kΩ	3.16 kΩ to 10 kΩ
10 kΩ	10 kΩ to 31.6 kΩ
30 kΩ	31.6 kΩ to 100 kΩ
100 kΩ	More than 100 kΩ

When the measurement range is set manually, the optimum measurement range should be selected by matching the DUT's impedance to the measurement range shown in Table 4-2. When the measurement range is set to AUTO, the optimum measurement range is automatically selected according to the impedance of each DUT.

Note: The measurement range is limited by the test frequency setting, when the oscillator level is equal to 2 V or less than 2 V. When the measurement range and the test frequency are set under the above conditions, the test frequency must be set first, and then the measurement range. If you set the measurement range first and then frequency, the resulting measurement range may not be the one you wanted to set.

Front Panel Operation for Setting the Measurement Range

Perform the following procedure to set the measurement range.

1) Move the cursor to the ***RANGE*** field using the CURSOR keys. The following softkeys will be displayed.

- ⇓(-)
  This softkey is used to decrease the measurement range in the HOLD (fixed range) mode.
- ⇑(+)
  This softkey is used to increase the measurement range in the HOLD (fixed range) mode.
- HOLD
  This softkey is used to change the measurement range from the AUTO

mode to the HOLD mode. When the measurement range is set to the HOLD mode, the impedance range is fixed at the current range setting, and the impedance range is displayed in the ***RANGE*** field.

- AUTO
  This softkey is used to set the measurement range to AUTO.

2) Use the softkeys to set the measurement range.

4.3.1.5 Measurement Speed

TH2816A's measurement speed is determined by the following conditions.

- Integration Time (A/D conversion)
- Averaging Rate (number of measurement averaged)
- Delay Time (time delay between the trigger and the start of the measurement)
- Measurement result's display time.

Generally, a slow measurement speed will result in more stable and accurate measurement results. SLOW, MED, and FAST measurement speed can be set.

Front Panel Operation for Setting the Measurement Speed

Perform the following steps to set the measurement speed.

1) Move the cursor to the ***SPEED*** field. The following softkeys will be displayed.
   - FAST
   - MED
   - SLOW
2) Use the preceding softkeys to select and set the measurement speed.

4.3.1.6 Short Correction

TH2816A's SHORT correction capability corrects for the residual impedance (R, X) in serial with the device under test.

Front Panel Operation for the Short Correction

There are two procedures: SHORT correction at all frequency points, and SHORT correction at the current test frequency point.

Perform the following steps to execute SHORT correction.

1) Move the cursor to the ***SHORT*** field. The following softkeys will be displayed.
   - ShSWP
   - ShCLR
   - OFF
   - ON
2) Connect the test fixture to the UNKNOWN Terminals, and short the measurement contacts together.
3) Press ShSWP. TH2816A will measure the short impedance (inductance and resistance) at all frequency points. Figure 4-7 shows the short correction information.

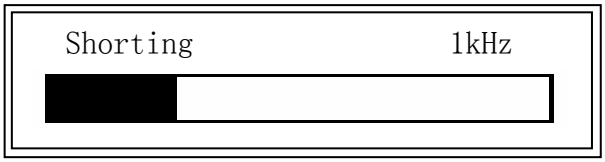

Figure 4-7. Short Correction Information

During the SHORT correction measurement cycle, the following softkey is available.

- ESC
  This softkey is used to stop the short correction data measurement. The previous SHORT correction data is still stored.

4) Press ON to perform SHORT correction calculations on subsequent

measurements.

5) Press OFF to halt SHORT correction calculations on subsequent measurements.

4.3.1.7 Open Correction

TH2816A's OPEN correction capability corrects errors due to the stray admittance (G, B) in parallel with the device under test.

Front Panel Operation for the Open Correction

There are two procedures: OPEN correction at all frequency points, and OPEN correction at the current test frequency point.

Perform the following steps to execute OPEN correction.

1) Move the cursor to the ***OPEN*** field. The following softkeys will be displayed.
   - OpSWP
   - OpCLR
   - OFF
   - ON
2) Connect the test fixture to the UNKNOWN Terminals without connecting the device under test.
3) Press OpSWP. TH2816A will measure the open admittance (capacitance, and inductance) at all frequency points. Figure 4-8 shows the open correction information.

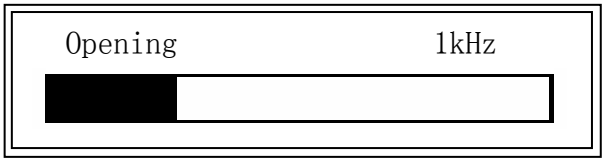

Figure 4-8. Open Correction Information

During the OPEN correction measurement cycle, the following softkey is available.

- ESC
  This softkey is used to stop the OPEN correction data measurement. The previous OPEN correction data is still stored.

4) Press ON to perform OPEN correction calculations on subsequent measurements.
5) Press OFF to halt OPEN correction calculations on subsequent measurements.

4.3.1.8 File Management

TH2816A uses the internal non-volatile memory for storing and retrieving a maximum of 12 sets of instrument control settings. File information can be checked and managed from the ***Files List*** Page. The following data will be stored in non-volatile memory as one file.

- Control settings on the ***Meas Setup*** page.
  - ✧ Measurement Function
  - ✧ Test Frequency
  - ✧ Oscillator Level
  - ✧ Measurement Range
  - ✧ Measurement Speed
  - ✧ Trigger Mode
  - ✧ Output Impedance
  - ✧ Delay Time
  - ✧ Averaging Rate
  - ✧ V_m/I_m Monitor on/off
  - ✧ Deviation Measurement A/B(ΔABS/Δ%/off)
  - ✧ Deviation Measurement AB Reference Value
- Control settings on the ***Limit Table*** page.

- ✧ Nominal Value
- ✧ Measurement Function (Swap Parameter)
- ✧ Limit Mode for the Primary Parameter
- ✧ Comparator Function on/off
- ✧ Auxiliary Bin on/off
- ✧ Alarm on/off
- ✧ Low/High Limits for Each Bin

- Control setting on the ***Bin Count*** page.
  - ✧ Bin Count Capability on/off
- Control settings on the ***List Setup*** page.
  - ✧ Sweep Mode
  - ✧ All Sweep Points
  - ✧ All Low/High Limits including the limit mode (A or B)
- Display page format

When TH2816A is turned on, TH2816A's auto load function will load the control settings stored in file number 0. If there are no control settings stored in file number 0, the power-on default settings will be used.
The following items are stored in internal nonvolatile memory without using the LOAD/SAVE function.

- Control settings on the ***User Correction*** page.
  - ✧ OPEN, SHORT, LOAD correction on/ff
  - ✧ OPEN, SHORT correction data for all test frequencies.
  - ✧ OPEN, SHORT, LOAD correction data at FREQ1, FREQ2, and FREQ3. (OPEN correction data at each frequency, SHORT correction data at each frequency, and LOAD correction reference data and actual data at each frequency.)
- Control settings on the ***System Config*** page.
  - ✧ Contrast of LCD
  - ✧ Information Beeper on/off
  - ✧ Comparator Alarm on/off
  - ✧ Password
  - ✧ Bus Mode
  - ✧ GPIB address
  - ✧ Talk Only on/off

Perform the following steps to save the control settings to the internal non-volatile memory.
1) Select and set all control settings on the ***MeasDisplay*** page.
2) Move the cursor to the ***File*** field.
3) Press SAVE. The message “Enter save number” will be displayed in the message window.
4) Press ESC to cancel the number input operation.
5) Enter a save number from 0 to 11 using the numeric entry keys and press ENTER. The message “Enter File Name” will be displayed in the message window.
6) Press ESC to cancel the file name input operation.
7) Enter a file name using the numeric entry keys and ENTER to save the current control settings. Numeric digits and characters can be inputted as a file name.

Perform the following steps to load the control settings from the internal non-volatile memory.
1) Move the cursor to the ***File*** field.
2) Press LOAD. The message of available file(s) will be listed in the message window as shown in Figure 4-9.

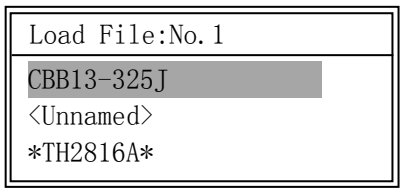

Figure 4-9. Available Files Message Window

3) Use the up and down cursor keys to select a file and press OK to load the file.
4) Press ESC to cancel the load file operation.

4.3.1.9 Useful Tools

TH2816A displays the measurement data using a six digit floating point display format. The fixed decimal point function is used to display the measurement data using a fixed point display format. This function can also be used to change the number of digits displayed.

Perform the following steps to use the xed decimal point function.

1) Move the cursor to the ***Tools*** field.
2) Press FIX A to fix the decimal point for the main parameter's data. The "_" mark will be displayed at the decimal fixed point. Each time FIX A is pressed, the last digit is dropped, the value is rounded off.
3) Press FIX B to fix the decimal point for the sub parameter's data. The "_" mark will be displayed at the decimal fixed point. Each time FIX B is pressed, the value is rounded off giving one less digit.
4) Press ↑↓ to switch the measurement result display characters between large character and normal character.
5) Press KEY🔒 to lock the keyboard and "KeyLocked !" message will be displayed in the message window.
6) Press KEY🔓 to unlock the keyboard and "KeyUnlock !" message will be displayed in the message window.

Note: When the measurement function is changed, the fixed decimal point function is automatically disabled.

4.3.2 Bin Number Display Page

When you press DISPLAY, and BinNo, the ***BinNo. Disp*** page will be displayed. The bin sorting results are displayed in large characters and the measurement results are displayed in normal characters on the ***BinNo. Disp*** page, and the following measurement controls can be set from the ***BinNo. Disp*** page. (The field in parenthesis is used when this control is set.)

- Comparator Function ON/OFF (***COMP***)
- Auxiliary Bin ON/OFF (***AUX***)
- File Management (***File***)
- Useful Tools (***Tools***)

There are five fields on this page: ***<BinNo. Disp>***, ***COMP***, ***AUX***, ***File***, and ***Tools*** fields.

Each control is described in the following paragraphs.

This page also provides the following information in the monitor areas (each monitor area looks like a field, but is not). These conditions can be set from the ***Meas Setup*** page, and most conditions can be set from the ***MeasDisplay*** page.

- Measurement Function (***FUN***)
- Test Frequency (***FRQ***)
- Oscillator Level (***LEV***)
- Measurement Range (***RANGE***)
- Measurement Speed (***SPEED***)
- Open Correction (***OPEN***)

■ Short Correction (***SHORT***)

The available fields and the softkeys which correspond to each field on this page are shown in Figure 4-10 and Figure 4-11.

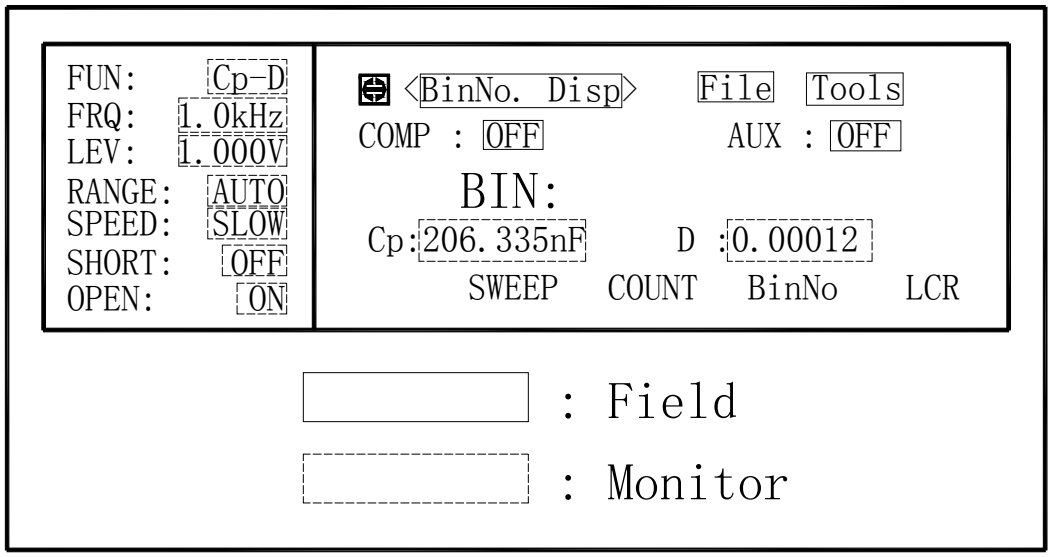

Figure 4-10 Available Fields on the BinNo. Disp Page

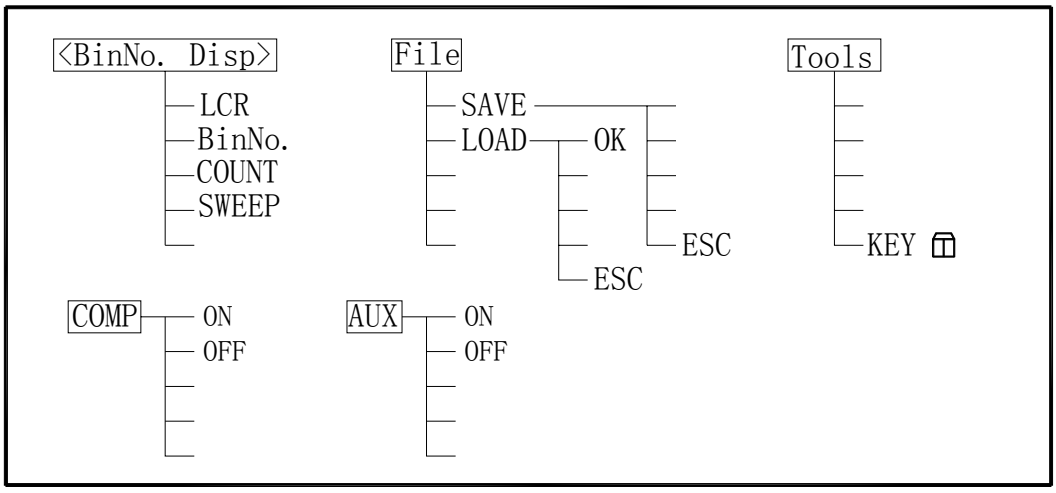

Figure 4-11 Available Softkeys on the BinNo. Disp Page

4.3.2.1 Comparator Function ON/OFF

TH2816A's built-in comparator can sort devices into a maximum of 10 bins (BIN 1 to BIN 9 and the OUT bin) using a maximum of 3 pairs of primary limits and one pair of secondary parameter limits. Also, a device whose primary parameter is within limits, but whose secondary parameter measurement result is not within limits can be sorted into an AUXiliary BIN. The comparator function is especially useful when using TH2816A with a component handler. These limit settings for bin sorting are only set on the ***Limit Table*** page under SETUP menu. So this ***COMP*** field allows you to only set the comparator function to ON or OFF.

Front Panel Operation for Setting the Comparator Function to ON or OFF

Perform the following steps to set the comparator function to ON or OFF.

1) Move the cursor to the ***COMP*** field. The following softkeys will be displayed.

- ON
- OFF

2) Use the softkeys to set the comparator function to ON or OFF.

4.3.2.2 Auxiliary Bin ON/OFF

When the secondary parameters affect the sorting results, the limits for the secondary parameter can be set in 2nd ***LOW/HIGH*** fields. So there are four patterns for the sorting area of the secondary parameter.

- When the secondary parameter limits are not specified on the ***Limit Table*** page. Devices will be sorted according to primary parameter comparison results.

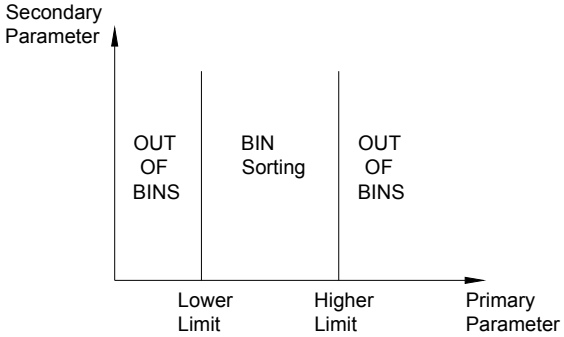

- When the secondary parameter limits are set and AUX BIN are set to OFF. Only devices with secondary limits are sorted by the primary parameter result. Devices not within the secondary parameter limits are sorted OUT OF BINS even if the device's primary parameter is within limits.

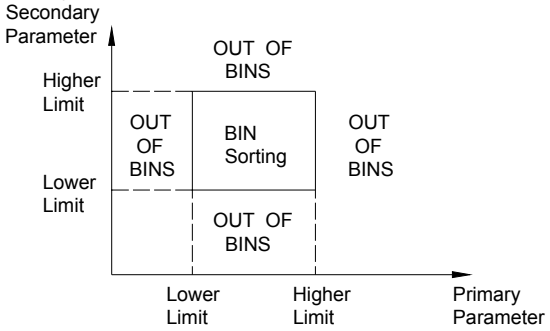

- When the secondary parameter limits are set and AUX BIN are set to ON. Devices whose primary parameter is not within limits are sorted OUT OF BINS. Devices whose primary parameter is within limits, but whose secondary parameter is out of limits are sorted into the AUX BIN.

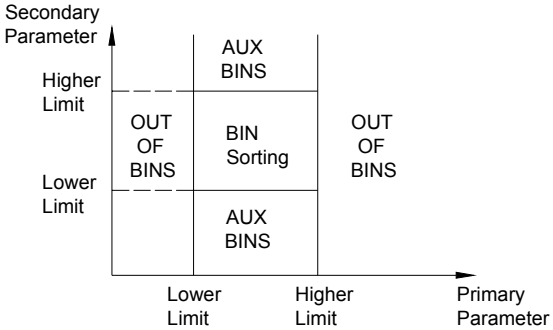

- When only the lower limit of the secondary parameter is set and the AUX BIN are set to ON, the devices whose primary parameter is within limits, but whose secondary parameter is equal to or below the lower limit are sorted into the AUX BIN. Also when only the higher limit of the secondary parameter is set and the AUX BIN are set to ON, the devices whose primary parameter is within limits, but whose secondary parameter is equal or above the higher limit are sorted into the

AUX BIN. (See below.)

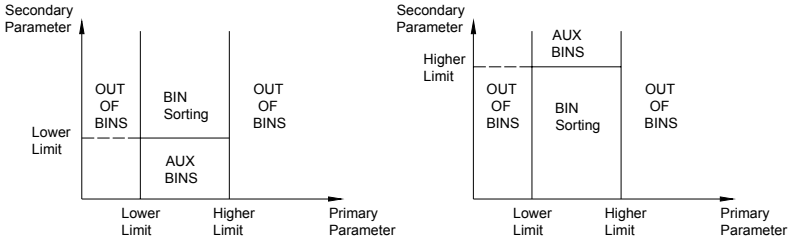

The ***AUX*** field allows you to set the AUX BIN to ON or OFF.

Front Panel Operation for Setting the AUX BIN to ON or OFF
Perform the following steps to set the AUX BIN to ON or OFF.
1) Move the cursor to the ***AUX*** field. The following softkeys will be displayed.
   - ON
   - OFF
2) Select and press a softkey to set AUX BIN to ON or OFF.

4.3.2.3 File Management

This function is the same as the function on the ***MeasDisplay*** page (Refer to 4.3.1.8 File Management.)

4.3.2.4 Useful Tools

The key lock function is used to disable all front panel operation.
Perform the following steps from the ***BinNo. Disp*** page to disable or enable all front panel operation.
1) Move the cursor to the ***Tools*** field.
2) Press KEY to lock the keyboard and “KeyLocked !” message will be displayed in the message window.
3) Press KEY to unlock the keyboard and “KeyUnlock !” message will be displayed in the message window.

4.3.3 Bin Count Display Page

When you press DISPLAY and COUNT, the ***Bin Count*** page will be displayed. On the ***Bin Count*** page, the comparator's count results are displayed, and the following measurement controls can be set.
- Counter ON/OFF(***COUNT***)
- Comparator Function ON/OFF (***COMP***)
- Auxiliary Bin ON/OFF (***AUX***)
- File Management (***File***)
- Useful Tools (***Tools***)

There are six fields on this page: ***<Bin Count>***, ***COUNT***, ***COMP***, ***AUX***, ***File***, and ***Tools*** fields.
Each control is described in the following paragraphs.
This page also provides the following information in the monitor areas (each monitor area looks like a field, but is not). These conditions can be set from the ***Meas Setup*** page, ***List Table*** page and most conditions can be set from the ***MeasDisplay*** page.
- Measurement Function (***FUN***)
- Nominal Value (***NOMINAL***)

The available fields and the softkeys which correspond to each field on this page are shown in Figure 4-12 and Figure 4-13.

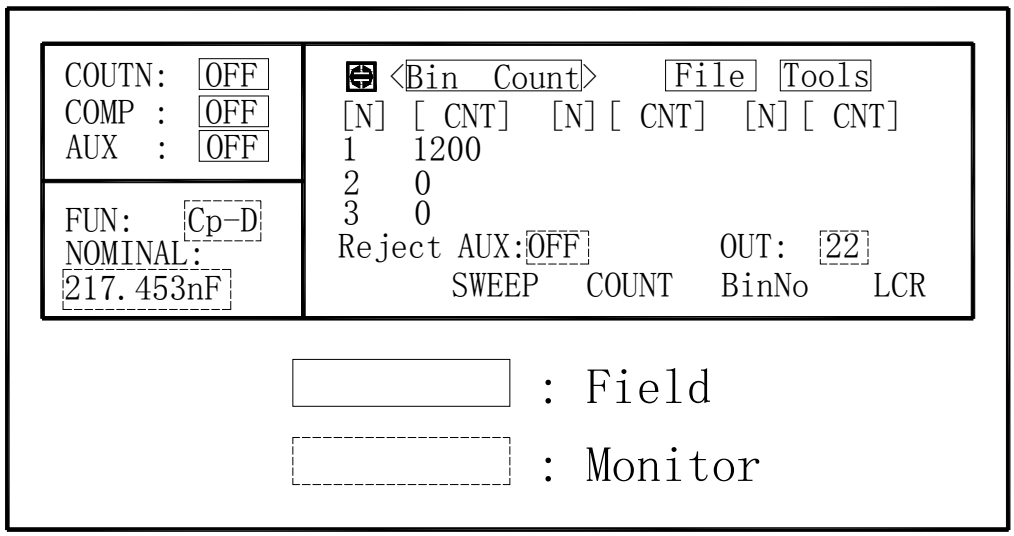

Figure 4-12. Available Fields on the Bin Count Page

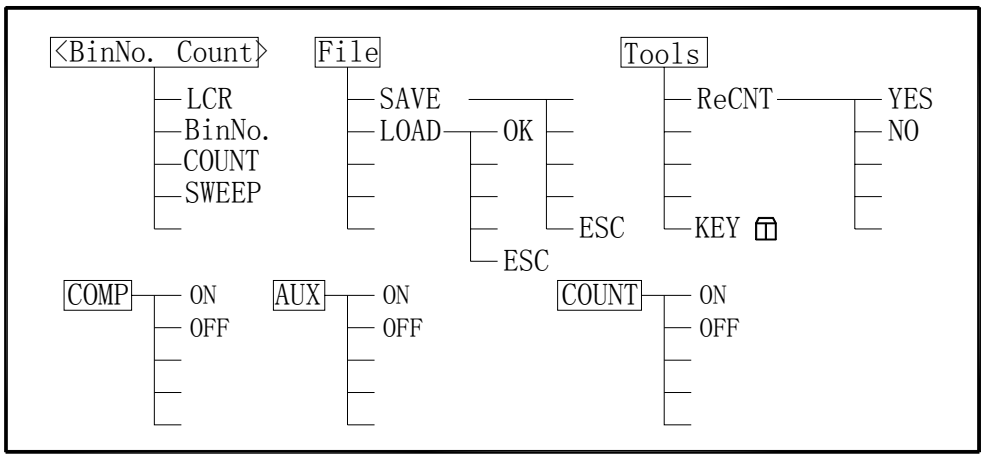

Figure 4-13. Available Softkeys on the Bin Count Page

4.3.3.1 Counter ON/OFF

TH2816A has bin counting capability. When many devices are being sorted into bins using the comparator function, the number of devices sorted into each bin is counted. The maximum count is 999999, the overflow message "----" will be displayed when this value is exceeded. The bin counter will still be operating, so you can only get the count data via GPIB.

Perform the following steps to set the counter function to ON or OFF from the ***Bin Count*** page.

1) Move the cursor to ***COUNT*** field on the ***Bin Count*** page. The following softkeys will be displayed.
   - ON
   - OFF
2) Press ON to set the counter function to ON. An arrow will be displayed at the left of ***CNT***.

3) Press OFF when you want to set the counter function to OFF. The arrow at the left of ***CNT*** will disappear.

4.3.3.2 Comparator Function ON/OFF

This function is the same as the function on the ***BinNo. Disp*** Page. (Refer to 4.3.2.1 Comparator Function ON/OFF.)

4.3.3.3 Auxiliary Bin ON/OFF

This function is the same as the function on the ***BinNo. Disp*** Page. (Refer to 4.3.2.2 Auxiliary Bin ON/OFF.)

4.3.3.4 File Management

This function is the same as the function on the ***MeasDisplay*** page. (Refer to 4.3.1.8 File Management.)

4.3.3.5 Useful Tools

The ***Tools*** field on this page allows you to perform key lock function and reset counter function.

Perform the following steps from the ***Bin Count*** page to disable, enable all front panel operation, and reset counters.

1) Move the cursor to the ***Tools*** field.
2) Press KEY🔒 to lock the keyboard and “KeyLocked !” message will be displayed in the message window.
3) Press KEY🔓 to unlock the keyboard and “KeyUnlock !” message will be displayed in the message window.
4) Press ReCNT, when you want to reset all counts to zero. The message “Reset Bin Counter?” will be displayed in the message window, and YES and NO softkeys will be displayed
5) Press YES to confirm reset operation.
6) Press NO to cancel reset operation.

4.3.4 List Sweep Page

TH2816A's List Sweep function permits entry of up to 4 frequencies, signal voltage levels, or DC bias current levels, and the measurement limits on the ***List Setup*** page under the SETUP page. These points are automatically swept and the measurement results are compared to the limits set. When you press DISPLAY and SWEEP, the ***List Sweep*** page will be displayed. On the ***List Sweep*** page, the sweep points are swept and the measurement results are compared to the limits. During a sweep, the parameter of the current measuring list sweep point will be displayed as an inverse video image of the original display. The following measurement controls can be set from this page. (Each field in parenthesis is used when that control is set.)

- Sweep Mode of the List Sweep Measurement (***MODE***)
- File Management (***File***)
- Useful Tools (***Tools***)

So there are four fields on this page: ***<List Sweep>***, ***MODE***, ***File***, and ***Tools*** fields.
The list sweep point can not be set from this page, but can only be set from the ***List Setup*** page.
The available fields and the softkeys which corresponded to each field on this page are shown in Figure 4-14 and Figure 4-15.

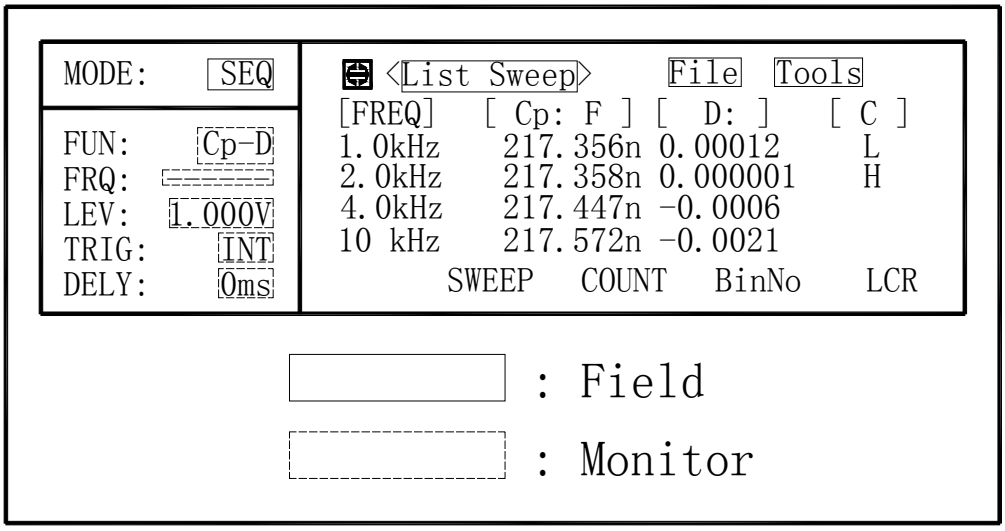

Figure 4-14. Available Fields on the List Sweep Page

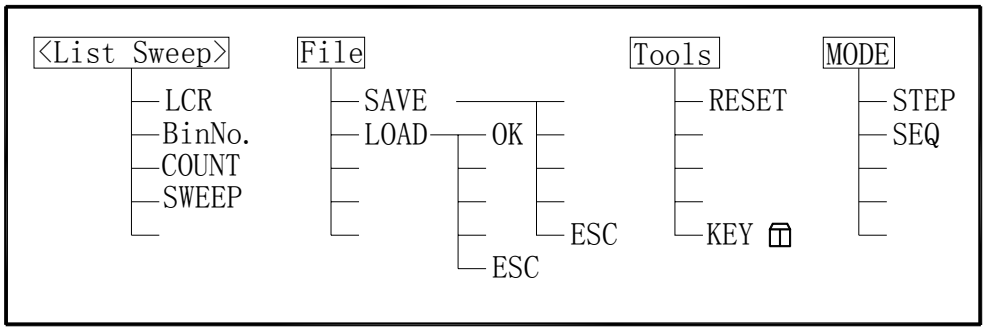

Figure 4-15. Available Softkeys on the List Sweep Page

4.3.4.1 Sweep Mode of the List Sweep Measurement

TH2816A's List Sweep Measurement function permits up to 4 test frequencies, oscillator voltage levels, or DC bias current points to be automatically measured. There are two measurement modes for list sweep measurements: sequential (SEQ) mode and step (STEP) mode. In the case of SEQ mode, when TH2816A is triggered once, all sweep points are automatically swept. In the case of the STEP mode, each time TH2816A is triggered the sweep point is swept by one step.

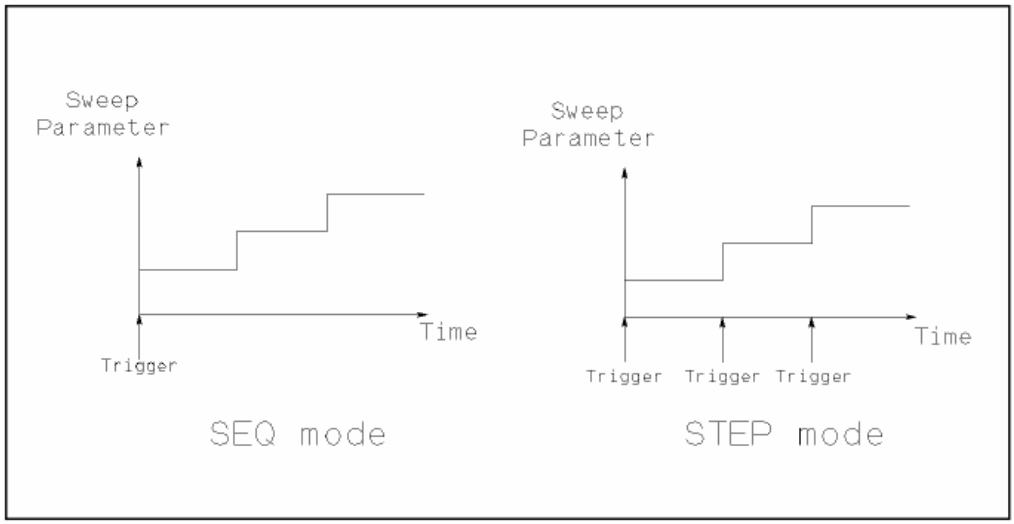

Figure 4-16. SEQ Mode and STEP Mode

Front Panel Operation for Setting the Sweep Mode

Perform the following steps to set the list sweep measurement mode to the SEQ or STEP modes.

1) Move the cursor to the ***MODE*** field. The following softkeys will be displayed.
   - SEQ
   - STEP
2) Use the softkeys to select and set the list sweep measurement mode (SEQ or STEP mode).

4.3.4.2 File Management

This function is the same as the function on the ***MeasDisplay*** page. (Refer to 4.3.1.8 File Management.)

4.3.4.3 Useful Tools

The ***Tools*** field on this page allows you to perform key lock function and reset function.

Perform the following steps from the ***List Sweep*** page to disable, enable all front panel operation, and reset measurement results and comparison results.

1) Move the cursor to the ***Tools*** field.
2) Press KEY to lock the keyboard and “KeyLocked !” message will be displayed in the message window.
3) Press KEY to unlock the keyboard and “KeyUnlock !” message will be displayed in the message window.
4) Press RESET, when you want to reset all measurement results and comparison results.

4.4 SETUP Menu

This Chapter provides information for each page's function under SETUP. SETUP have four display pages as listed below.

- ***Meas Setup***
- ***User Correction***
- ***Limit Table***
- ***List Setup***

This Chapter describes each function of each page in the order of the preceding list.

4.4.1 Meas Setup Page

When you press SETUP, the ***Meas Setup*** page will be displayed. On this ***Meas Setup*** page, all of the following measurement control functions can be set. (Each field in parenthesis is used when each control is set.)

- Measurement Function (***FUN***)
- Test Frequency (***FRQ***)
- Oscillator Level (***LEV***)
- Measurement Range (***RANGE***)
- Measurement Speed (***SPEED***)
- Short Correction (***SHORT***)
- Open Correction (***OPEN***)
- Trigger Mode (***TRIG***)
- Output Signal impedance (***INT_R***)
- Delay Time (***DELAY***)
- Averaging Rate (***AVG***)
- Signal Level Monitor ON/OFF (***Vm/Im***)
- Deviation Measurement A Mode (***DEV_A***)
- Deviation Measurement B Mode (***DEV_B***)
- Reference Value for the Deviation Measurement A (***REF_A***)
- Reference Value for the Deviation Measurement B (***REF_B***)
- File Management (***File***)
- Useful Tools (***Tools***)

Following fields on the ***Meas Setup*** page are the same as the fields on the ***MeasDisplay*** page as follows. So, these fields are not described in this Chapter, and the other functions on the ***Meas Setup*** page are described in the following paragraphs.

- Measurement Function (***FUN***)
- Test Frequency (***FRQ***)
- Oscillator Level (***LEV***)
- Measurement Range (***RANGE***)
- Measurement Speed (***SPEED***)
- Short Correction (***SHORT***)
- Open Correction (***OPEN***)

The available fields and the softkeys which corresponded to each field on this page are shown in Figure 4-17 and Figure 4-18.

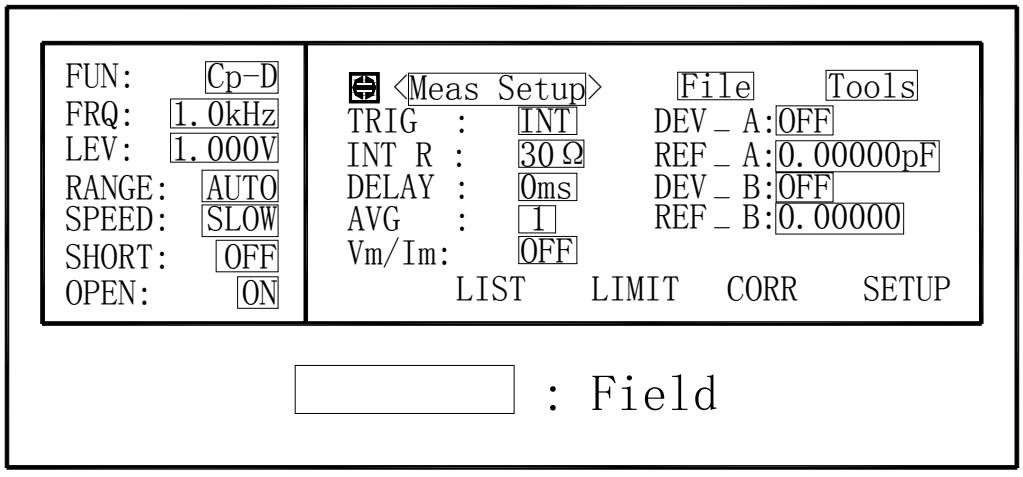

Figure 4-17. Available Fields on the MEAS SETUP Page

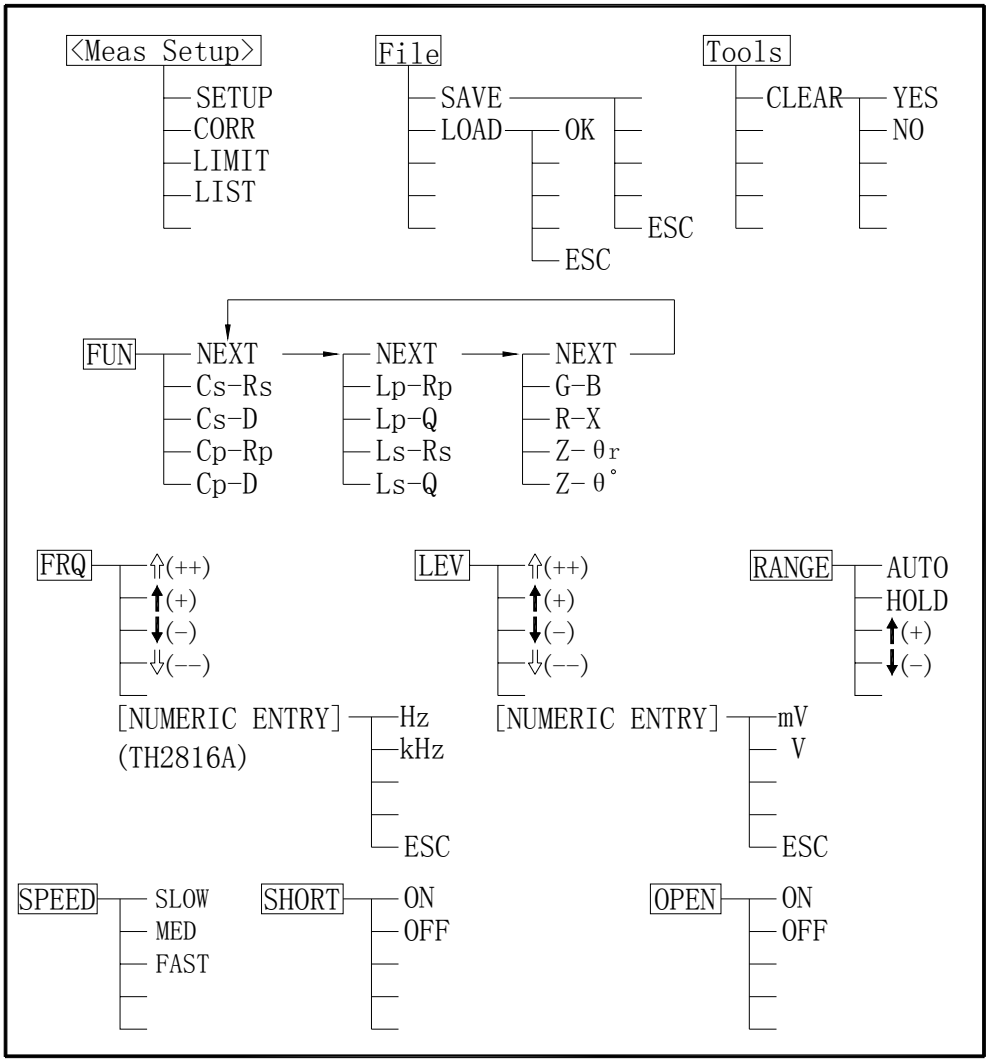

Figure 4-18. Available Softkeys on the MEAS SETUP Page (1/2)

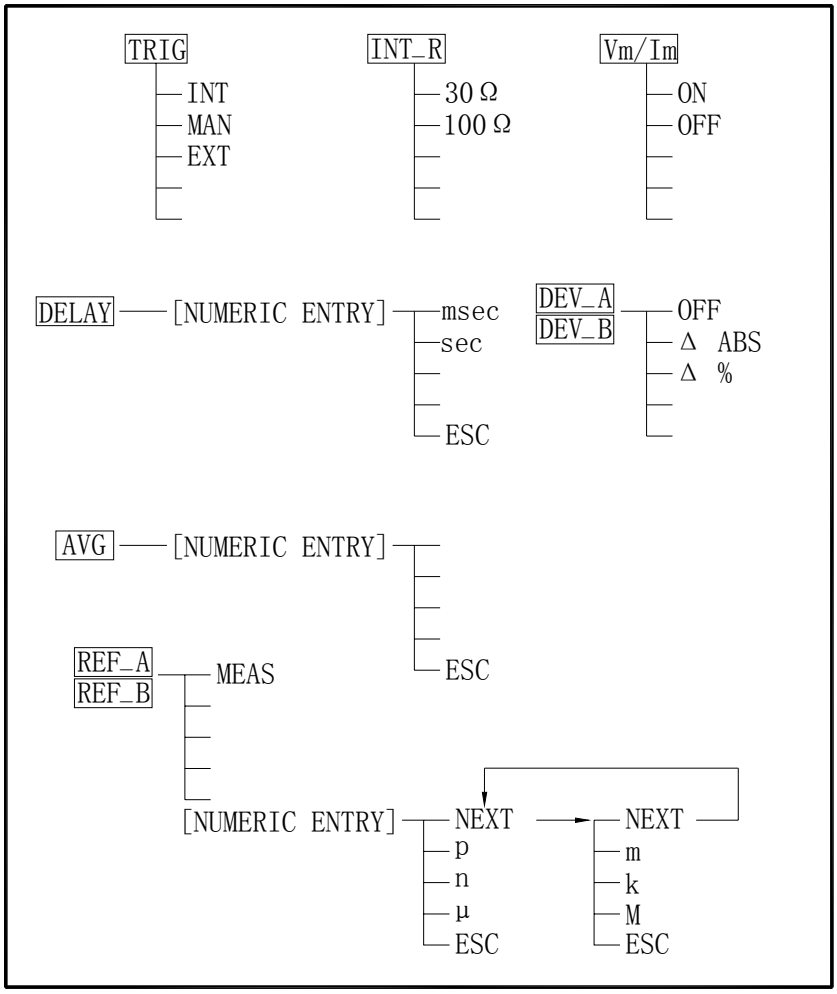

Figure 4-18. Available Softkeys on the MEAS SETUP Page (2/2)

4.4.1.1 Trigger Mode

TH2816A has four trigger modes: INTernal, EXTernal, MANual, and BUS.
When the trigger mode is set to INT trigger mode, TH2816A continuously repeats measurements on any display page under DISPLAY.
When the trigger mode is set to MAN trigger mode, TH2816A performs a single measurement on any display page under DISPLAY every time TRIGGER on the front panel is pressed.
When the trigger mode is set to EXT trigger mode, TH2816A performs a single measurement on any display page under DISPLAY every time a rising edge of a pulse is applied to the EXT Trigger pin in the Handler Interface.
When the trigger mode is set to BUS trigger mode, TH2816A performs a single measurement every time the TRIGGER command is sent to TH2816A via GPIB or RS232C. Then the BUS trigger mode cannot be set on the front panel.

Front Panel Operation for Setting the Trigger Mode
Perform the following steps to set the trigger mode except for in the BUS TRIG mode.
1) Move the cursor to the ***TRIG*** field. The following softkeys will be displayed.
   - EXT
   - MAN
   - INT
2) Set the trigger mode using the softkeys.

4.4.1.2 Output Signal impedance

TH2816A provides two different signal output impedance 30Ω and 100Ω in order to be compatible with other well-known instruments in the world.

Front Panel Operation for Setting the Trigger Mode

Perform the following steps to select the signal output impedance.

1) Move the cursor to the ***INT_R*** field. The following softkeys will be displayed.
   - 30Ω
   - 100Ω
2) Set the signal output impedance using the softkeys.

4.4.1.3 Delay Time (DELAY)

TH2816A's delay time function allows you to set a trigger delay, so TH2816A will delay the start of the measurement after it is triggered. (When the list sweep measurement is performed, TH2816A will delay the start of the measurement at each sweep point using the trigger delay time.) The trigger delay time can be set from 0 s to 60 s in 1 ms steps. This function is useful if a component handler triggers TH2816A before stable contact is made with the device under test (dut).

Front Panel Operation for Setting the Delay Time

Perform the following steps to set the delay time.

1) Move the cursor to the ***DELAY*** field.
2) Enter the delay time using the numeric entry keys. When one of the numeric entry keys is pressed, the following unit softkeys will be displayed, these can be used instead of ENTER.
   - sec
   - msec
   - ESC
3) Press ESC to cancel the date input.

4.4.1.4 Averaging Rate (AVG)

TH2816A's averaging rate function arithmetically averages the results of two or more A/D conversions. The number of conversions averaged can be set from 1 to 255, in steps of 1.

Front Panel Operation for Setting the Averaging Rate

Perform the following steps to set the averaging rate.

1) Move the cursor to the ***AVG*** field.
2) Enter the averaging rate using the numeric entry keys. When one of the numeric entry keys is pressed, data input message window will be displayed, and the ESC softkey will be displayed, ESC can be used to cancel the data input operation.

4.4.1.5 Signal Level Monitor ON/OFF

The level monitor function allows you to monitor the actual voltage level across the device under test or the actual current level though the device under test. The voltage monitor value is only displayed on the ***MeasDisplay*** page at Vm monitor area. The current monitor value is only displayed on the ***MeasDisplay*** page at Im monitor area.

Front Panel Operation for Setting the Level Monitor Function

Perform the following steps to set the level monitor function to ON or OFF.

1) Move the cursor to the ***Vm/Im*** field. The following softkeys will be displayed.
   - ON
   - OFF

2) Press ON to set the level monitor function to ON. Press OFF to set the level monitor function to off.

4.4.1.6 Deviation Measurement Function

The deviation measurement function allows you to display the deviation value instead of the actual measurement value. The deviation value is the value calculated by taking the difference between the actual measurement value and a previously stored reference value. This function is useful when the change of a component's value versus changes in temperature, frequency, bias, etc. are being observed. Deviation measurements can be made for either or both primary parameter and/or secondary parameter measurements. There are two types of deviation measurements.

- ΔABS (Delta ABSolute) deviation measurement
  The difference between the measured value of the DUT and a previously stored reference value are displayed. The formula used to calculate the deviation is as follows.
  ΔABS = X-Y
  Where, X: The measured value of DUT.
  Y: The stored reference value.
- Δ% (Delta percent) deviation measurement
  The difference between the measured value of the DUT and a previously stored reference value are displayed as a percentage of the reference value. The formula used to calculate the percent deviation is as follows.
  Δ% = (X-Y)/Y×100%
  Where, X: The measured value of DUT.
  Y: The stored reference value.

Perform the following steps to execute the deviation measurement function.

1) Move the cursor to the ***REF_A*** field to enter the reference value for the primary parameter. The following softkey will be displayed.
   - MEAS
     When the device which has a reference value is connected, pressing this MEAS softkey, TH2816A measures the device, and the primary measurement result is entered as a reference value for ***REF_A***.
2) Enter the reference value for the primary parameter using MEAS or the numeric entry keys.
3) Move the cursor to the REF_B field to enter the reference value for the secondary parameter. The following softkey will be displayed.
   - MEAS
     When the device is to be used as the reference value is connected, MEAS is pressed, TH2816A measures the device, and the secondary measurement result is entered as a reference value for REF_B values.
4) Enter the reference value for the secondary parameter using MEAS or the numeric entry keys.
5) Move the cursor to the DEV_A field. The following softkeys will be displayed.
   - Δ%
   - ΔABS
   - OFF
6) Select and press a softkey to select the deviation mode for the primary parameter.
7) Move the cursor to the DEV_B field. The following softkeys will be displayed.
   - Δ%
   - ΔABS
   - OFF
8) Select and press a softkey to select the deviation mode for the secondary parameter.

4.4.1.7 File Management

This function is the same as the function on the ***MeasDisplay*** page. (Refer to 4.3.1.8 File Management.)

4.4.1.8 Useful Tools

The ***Tools*** field on this page allows you to reset all the control settings to the default settings.
Perform the following steps from the ***Meas Setup*** page to reset all control settings.

1) Move the cursor to the ***Tools*** field. The following softkey will be displayed.
   - CLEAR
2) Press CLEAR, "Confirm: Clear All?" will be displayed in the message window. The following softkeys will be displayed.
   - NO
   - YES
3) Press NO to cancel the CLEAR operation.
4) Press YES to reset all control settings to the default settings.

4.4.2 User Correction

When you press SETUP, and CORR, the ***User Correction*** page will be displayed. On the ***User Correction*** page, the OPEN, SHORT, LOAD correction for correcting the stray admittance, the residual impedance, and the other errors can be performed. The correction function has two kinds of correction methods. In one method the open and short correction can be performed at all of the frequency points, and in the other method the open, short, and load correction can be performed at the frequency points you specify.
The following operations can be performed from this page. The field is in parenthesis.

- OPEN Correction (***OPEN***)
- SHORT Correction (***SHORT***)
- LOAD Correction (***LOAD***)
- Measurement Function for LOAD Correction (***FUN***)
- Frequency 1, 2, 3 for OPEN, SHORT, LOAD Correction (***FREQ1***, ***FREQ2***, and ***FREQ3***)
- Reference Values (A, B) at each three frequencies for LOAD Correction (***REF_A***, ***REF_B***)

There are fourteen available fields on this page: ***<User Correction>***, ***OPEN***, ***SHORT***, ***LOAD***, ***FUNC***, ***FREQ1***, ***REF_A***, ***REF_B***, ***FREQ2***, ***REF_A***, ***REF_B***, ***FREQ3***, ***REF_A***, and ***REF_B***.
These controls are described in the following paragraphs.
This page also provides the following monitor information (the monitor area looks like a field, but it is not).

- Actual Measurement Values for LOAD Correction

The actual measurement values for LOAD Correction can be measured from the ***LOAD*** field on this page.
The available fields and the softkeys which are corresponded with each field on this page are shown in Figure 4-19 and Figure 4-20

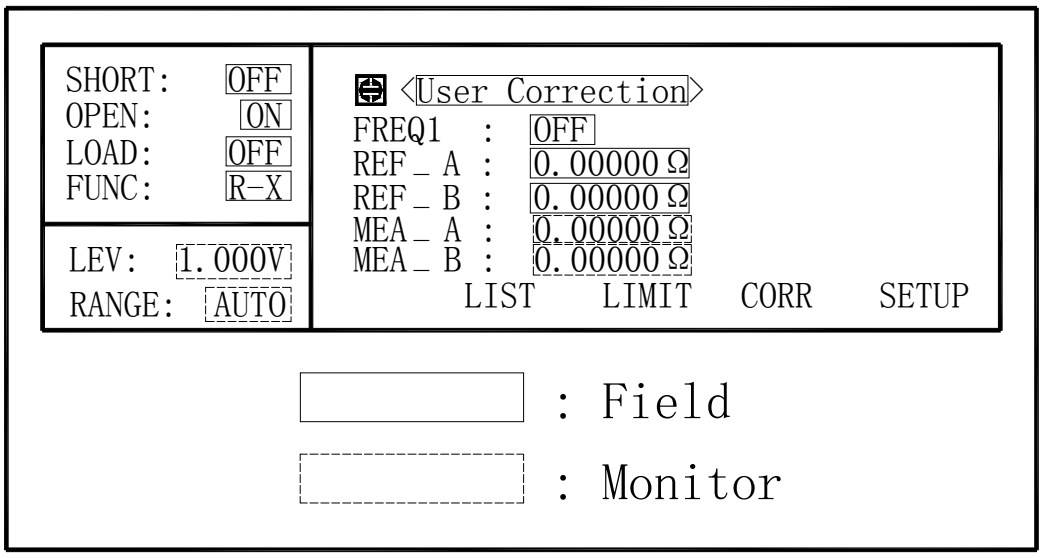

Figure 4-19. Available Fields on the User Correction Page

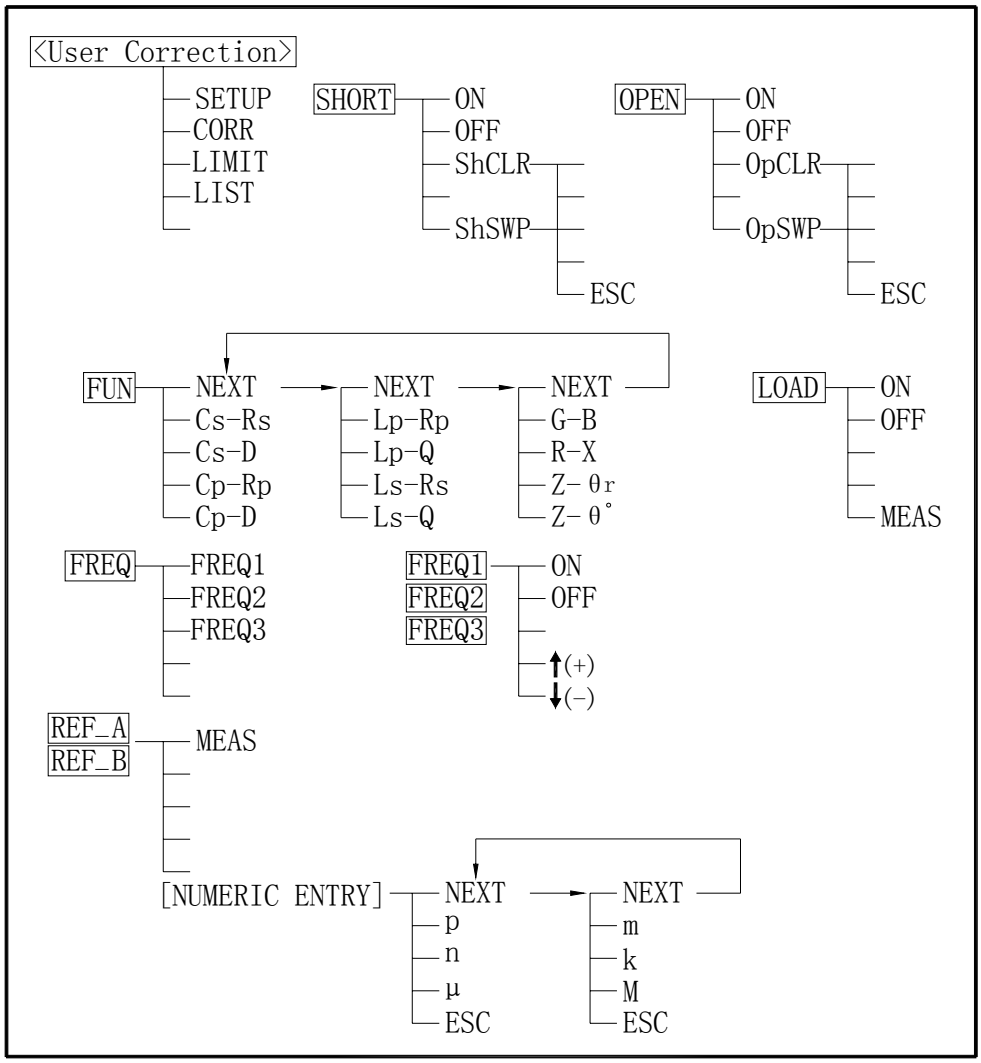

Figure 4-20. Available Softkeys on the User Correction Page

4.4.2.1 Open Correction

TH2816A's OPEN correction capability corrects errors due to the stray admittance (G, B) in parallel with the device under test. TH2816A uses the following two kinds of OPEN correction data as follows.

- The OPEN correction data is taken at all 16 typical frequency points independent of the frequency points you specify. The following is a list of the 16 typical frequency points.

50 Hz	60 Hz	100 Hz	120 Hz
200 Hz	400 Hz	500 Hz	1 kHz
2.0 kHz	4.0 kHz	5.0 kHz	10 kHz
20 kHz	40 kHz	50 kHz	100 kHz

  To take the OPEN correction data at all 16 typical frequency points, OpSWP, which is displayed when the cursor is moved to the ***OPEN*** field, is used.
- The OPEN correction data which is taken at the frequency points in the ***FREQ1***, ***FREQ2***, and ***FREQ3*** fields. To take the OPEN correction data at the frequency points you specify, OpCLR, which is displayed when the cursor is moved to the ***OPEN*** field, is used.

Front Panel Operation for the Open Correction

There are two procedures: OPEN correction at all frequency points, and OPEN correction at the frequency point you specify.

Perform the following steps to execute OPEN correction.

1) Move the cursor to the ***OPEN*** field. The following softkeys will be displayed.
   - OpSWP
   - OpCLR
   - OFF
   - ON
2) Connect the test fixture to the UNKNOWN Terminals without connecting the device under test.
3) Press OpSWP. TH2816A will measure the open admittance (capacitance, and inductance) at all frequency points. Figure 4-21 shows the open correction information.

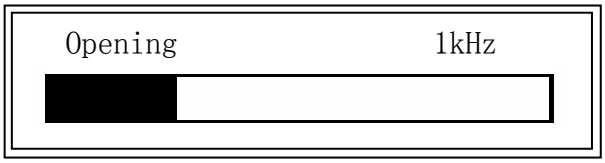

Figure 4-21. Open Correction Information

   During the OPEN correction measurement cycle, the following softkey is available.
   - ESC

     This softkey is used to stop the OPEN correction data measurement. The previous OPEN correction data is still stored.
4) Press OpCLR. TH2816A will measure the open admittance at the frequency point you specify.
5) Press ON to perform OPEN correction calculations on subsequent measurements. When the ***FREQ1***, ***FREQ2***, and ***FREQ3*** fields are set to ON, and the current test frequency is equal to FREQ1/FREQ2/FREQ3, the open correction data at FREQ1/FREQ2/FREQ3 is used
6) Press OFF to halt OPEN correction calculations on subsequent measurements.

4.4.2.2 Short Correction

TH2816A's SHORT correction capability corrects for the residual impedance (R, X) in

serial with the device under test. TH2816A uses the following two kinds of SHORT correction data.

- The SHORT correction data is taken at all 16 typical frequency points independent of the frequency points you specigy. The following is a list of the 16 typical frequency points.

50 Hz	60 Hz	100 Hz	120 Hz
200 Hz	400 Hz	500 Hz	1 kHz
2.0 kHz	4.0 kHz	5.0 kHz	10 kHz
20 kHz	40 kHz	50 kHz	100 kHz

  To take the SHORT correction data at all 16 typical frequency points, ShSWP, which is displayed when the cursor is moved to the ***SHORT*** field, is used.
- The SHORT correction data which is taken at the frequency points in the ***FREQ1***, ***FREQ2***, and ***FREQ3*** fields. To take the SHORT correction data at the frequency points you specify, ShCLR, which is displayed when the cursor is moved to the ***SHORT*** field, is used.

Front Panel Operation for the Short Correction

There are two procedures: SHORT correction at all frequency points, and SHORT correction at the frequency point you specify.

Perform the following steps to execute SHORT correction.

1) Move the cursor to the ***SHORT*** field. The following softkeys will be displayed.
   - ShSWP
   - ShCLR
   - OFF
   - ON
2) Connect the test fixture to the UNKNOWN Terminals, and short the measurement contacts together.
3) Press ShSWP. TH2816A will measure the short impedance (inductance and resistance) at all frequency points. Figure 4-22 shows the short correction information.

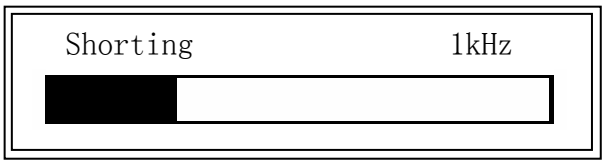

Figure 4-22. Short Correction Information

During the SHORT correction measurement cycle, the following softkey is available.

- ESC
  This softkey is used to stop the short correction data measurement. The previous SHORT correction data is still stored.

4) Press ShCLR. TH2816A will measure the short impedance at the frequency point you specify.
5) Press ON to perform SHORT correction calculations on subsequent measurements. When the ***FREQ1***, ***FREQ2***, and ***FREQ3*** fields are set to ON, and the current test frequency is equal to FREQ1/FREQ2/FREQ3, the short correction data at FREQ1/FREQ2/FREQ3 is used
6) Press OFF to halt SHORT correction calculations on subsequent measurements.

4.4.2.3 Load Correction

TH2816A's LOAD correction capability corrects for the other errors by using the transmission coefficient derived from the relationship between a standard's (premeasured) reference value to the actual measurement value at the frequency points you specify (up to three frequency points). So, OPEN/ SHORT/LOAD corrections can be performed at the frequency points you specify. The three

frequency points can be set in the ***FREQ1***, ***FREQ2***, and ***FREQ3*** fields. The standard's reference values are set in the ***REF_A*** and ***REF_B*** fields. Before entering the standard's reference values, the measurement function for the standard must be set in the ***FUN*** field. The standard's value can be measured using MEAS, which is displayed when the cursor is moved to the ***LOAD*** field.

Front Panel Operation for the OPEN/SHORT/LOAD Correction

Perform the following steps to perform the OPEN/ SHORT/LOAD correction at the frequency points you want to specify.

1) Move the cursor to the ***FREQ1***, ***FREQ2***, or ***FREQ3*** value field to specify the frequency for the OPEN/SHORT/LOAD correction. The following softkeys will be displayed.
   - ON
     This softkey is used to make the OPEN/SHORT/LOAD correction data at the FREQ1, FREQ2, or FREQ3 frequency point valid.
   - OFF
     This softkey is used to make the OPEN/SHORT/LOAD correction data at the FREQ1, FREQ2, or FREQ3 frequency point invalid.
   - ↓(-)
     This softkey is the fine frequency decrement softkey used to decrease the specified frequency to the next sequentially lower frequency point. The sequential frequency points which can be set using this softkey are as follows.

50 Hz	60 Hz	100 Hz	120 Hz
200 Hz	400 Hz	500 Hz	1 kHz
2.0 kHz	4.0 kHz	5.0 kHz	10 kHz
20 kHz	40 kHz	50 kHz	100 kHz

   - ↑(+)
     This softkey is the fine frequency increment softkey used to increase the specified frequency to the next sequentially higher frequency point. The frequency points set using this softkey are the same values as set using ↓(-).
2) Press ON to show the previous frequency for the OPEN/SHORT/LOAD correction.
3) Select the frequency using ↓(-) and ↑(+) softkeys.
4) Connect the test fixture to the UNKNOWN Terminals.
5) Leave the connection contacts open.
6) Move the cursor to the ***OPEN*** field.
7) Press OpCLR. TH2816A performs an OPEN correction measurement at the frequency points you specified.
8) Press ON to perform the OPEN correction calculations for subsequent measurements at the specified frequency points.
9) Move the cursor to the ***FREQ1***, ***FREQ2***, or ***FREQ3 value*** field at which you specified the frequency.
10) Short the connection contacts together.
11) Move the cursor to the ***SHORT*** field.
12) Press ShCLR. TH2816A will perform a SHORT correction measurement.
13) Press ON to perform the SHORT correction calculations for subsequent measurements at the specified frequency points.
14) Move the cursor to the ***FUN*** field.
15) Set the measurement function for your standard. (Refer to the next paragraph (Measurement function for the standard.))
16) Move the cursor to the ***REF_A*** field of your specified frequency.
17) Enter the premeasured value of your standard's primary parameter using the numeric entry keys and the unit softkeys.
18) Move the cursor to the ***REF_B*** field.
19) Enter your standard's premeasured secondary parameter value using the numeric entry keys and the unit softkeys.

20) Move the cursor to the ***LOAD*** field.
21) Connect the standard to the measurement contacts.
22) Press MEAS. TH2816A will perform a LOAD correction measurement, and display the LOAD correction data on the MEA_A and MEA_B monitor areas.
23) Press ON to enable the LOAD correction calculations for subsequent measurements at the specified frequency points.
24) Move the cursor to the ***FREQ1/2/3*** field, the following softkeys will be displayed.
    - FREQ1
    - FREQ2
    - FREQ2
25) Use the softkeys to select one of the three specified frequency.
26) Repeat step 1 to step 25 to perform the OPEN/SHORT/LOAD correction at another specified frequency.

4.4.2.4 Measurement Function for LOAD Correction

This function is the same as the function on the ***MeasDisplay*** page. (Refer to 4.3.1.1 Measurement Function.)

4.4.3 Limit Table

When you press SETUP, and LIMIT, the ***Limit Table*** page will be displayed. The ***Limit Table*** page allows you to set TH2816A's comparator. TH2816A's built-in comparator can sort devices into a maximum of 10 bins (BIN1 to BIN 9 and one OUT OF BINS) using a maximum of 3 pairs of primary limits and one pair of secondary parameter limits. Also, devices whose primary parameter is within limits, but whose secondary parameter measurement result is not within limits, can be sorted into an AUXiliary BIN. The comparator function is especially useful when using TH2816A with a component handler. These limit settings for bin sorting are only set on this ***Limit Table*** page.

- Nominal Value for tolerance mode (***NOMINAL***)
- Measurement Function (***FUNC***)
- Comparator Function's Limit Mode (***MODE***)
- Comparator Function ON/OFF (***COMP***)
- Auxiliary bin ON/OFF (***AUX***)
- Low Limit Value of each bin (***LOW***)
- High Limit Value of each bin (***HIGH***)
- File Management (***File***)
- Useful Tools (***Tools***)

Each function is described in the following paragraphs.
The available fields and the softkeys which correspond to the fields on this page are shown in Figure 4-23 and Figure 4-24.

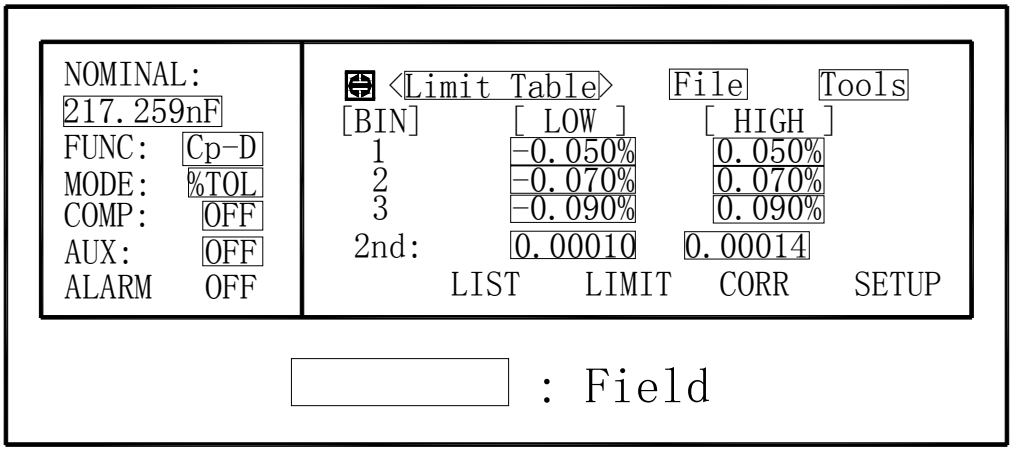

Figure 4-23. Available Fields on the Limit Table Page

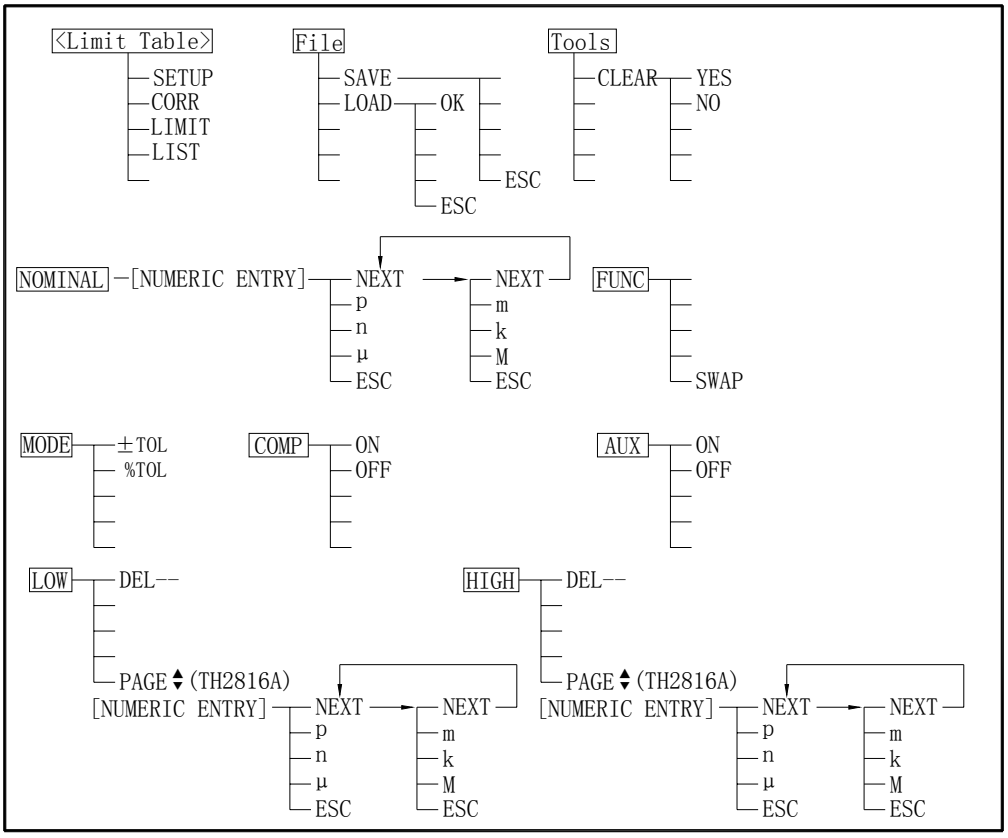

Figure 4-24. Available Softkeys on the Limit Table Page

4.4.3.1 Nominal Value for tolerance mode

When the tolerance mode is used as a limit mode for the primary parameter, the nominal value must be set.

Front Panel Operation for Setting the Nominal Value

Perform the following steps to set the nominal value.

1) Move the cursor to the ***NOMINAL*** field.
2) Enter the nominal value using the numeric entry keys. When the numeric data is entered, the unit softkeys (p , n , μ, m , k , M) can be used instead of ENTER.

4.4.3.2 Swap Parameter Function

The swap parameter function is used to swap the primary parameter for the secondary parameter in the ***FUNC*** field. For example, when the measurement function is Cp-D, the swap parameter function sets the measurement function to D-Cp. Then the comparison limits for D are a maximum of 3 pairs of comparison limits, and the comparison limits for Cp are now one pair.

Front Panel Operation for Swapping Parameter Function.
Perform the following steps to swap the primary parameter for the secondary parameter.

1) Move the cursor to the ***FUNC*** fied. The following softkey will be displayed.
   - SWAP
2) Press SWAP to swap the primary parameter for the secondary parameter.
3) Press SWAP again to return the measurement function to the previous combination.

4.4.3.3 Comparator Function's Limit Mode

There are two methods used to specify the tolerance mode limits, the ratio in percent and by parameter value.

Front Panel Operation for Setting the Limit Mode for the Comparator.
Perform the following steps to set the limit mode for the comparator.

1) Move the cursor to the ***MODE*** field. Then the following softkeys will be displayed.
   - % TOL
     This softkey is used to set the limit mode to the tolerance mode (the ratio in percent).
   - ±TOL
     This softkey is used to set the limit mode to the tolerance mode (parameter value).
2) Select and set the limit mode using the softkeys.

4.4.3.4 Comparator Function ON/OFF

This function is the same as the function on the ***BinNo. Disp*** Page (Refer to 4.3.2.1 Comparator Function.)

4.4.3.5 Auxiliary bin ON/OFF

This function is the same as the function on the ***BinNo. Disp*** Page. (Refer to 4.3.2.2 Measurement Function.)

4.4.3.6 Low/High Limit Value

TH2816A's built-in comparator can sort devices into a maximum of 4 bins (BIN 1 to BIN 3, and OUT OF BINS) using a maximum of 3 pairs of primary parameter limits and one pair of secondary parameter limits. These primary parameter low/high limits can be set in the BIN 1 to BIN 3 ***LOW***/***HIGH*** fields, and the secondary parameter low/high limits can be set in the 2nd ***LOW***/***HIGH*** fields.

Note: Do NOT enter a value which is lower than the LOW limit into the HIGH limit. If you do, the warning message “Warning: Low>High” will be displayed (this isn't an error), and TH2816A will not sort a DUT into the warning BINs you specify.

Front Panel Operation for Setting the Low/High Limits
Perform the following steps to set the bin sorting limits.

1) Set the measurement function for the comparator function, the nominal value,

and the limit mode for the primary parameter.

2) Move the cursor to the ***Tools*** field, and perform the clear table function.
3) Move the cursor to the BIN 1 ***LOW*** field.
4) Enter the limit value of the BIN 1 at BIN 1 ***LOW*** field using the numeric entry keys. When one of the numeric entry keys is pressed, the unit softkeys (p, n, μ, m, k, and M) are available, and so you can use these softkeys to enter the unit and terminate the entry without hitting ENTER. When the limit value of BIN 1 is entered in the BIN 1 ***LOW*** field, the BIN 1 low limit becomes – (absolute input value), and the BIN 1 high limit becomes + (absolute input value).
5) The cursor will be automatically moved to the BIN 2 ***LOW*** field. Repeat step 4 until the limits of the BIN 3 is entered. After that, the cursor will be moved to the 2nd ***LOW*** field.
6) Enter the low limit value of the secondary parameter. After that, the cursor will be automatically moved to the 2nd ***HIGH*** field.
7) Enter the high limit value of the secondary parameter.
8) If you want to change one of the high or low limit value. Move the cursor to the ***HIGH*** or ***LOW*** limit field, and input the new value using the numeric entry keys.
9) If you want to change both high and low limit values. Move the cursor to the ***HIGH*** or ***LOW*** limit field, press DEL— softkey to clear both high and low limit values. Then repeat step 4 to input the limits again.

4.4.3.7 File Management (File)

This function is the same as the function on the ***MeasDisplay*** page. (Refer to 4.3.1.8 File Management.)

4.4.3.8 Useful Tools

The ***Tools*** field on this page allows you to clear all of the limit values.
Perform the following steps from the ***Limit Table*** page to clear all of the limit values.

1) Move the cursor to the ***Tools*** field. The following softkey will be displayed.
   - CLEAR
2) Press CLEAR, “Confirm: Clear Table?” will be displayed in the message window. The following softkeys will be displayed.
   - NO
   - YES
3) Press NO to cancel the CLEAR operation.
4) Press YES to clear all of the limit values.

4.4.4 List Setup

When you press SETUP and LIST, the ***List Setup*** page will be displayed. TH2816A has a list sweep measurement function which permits up to 4 test frequencies, oscillator voltage levels, or DC bias current points to be automatically measured. On the ***List Setup*** page, the following control settings of the list sweep measurement can be set. (Each field in parenthesis is used when that control is set.)

- Sweep Parameter Selection (***LIST***)
- Sweep Mode (***MODE***)
- Sweep Point Settings (***sweep point***)
- Limit Parameter Selection (***C***)
- Low/High Limit Values (***LOW***, ***HIGH***)
- File Management (***File***)
- Useful Tools (***Tools***)

There are following fields on this page: ***<List Setup>***, ***LIST***, ***MODE***, ***FREQ*** (***LEVEL***, or ***iBIAS***), ***C***, ***LOW***, ***HIGH***, ***File***,***Tools*** and ***sweep points***.
These functions are described in the following paragraphs.
The available fields and softkeys which corresponded to the fields on this page are shown in Figure 4-25 and Figure 4-26.

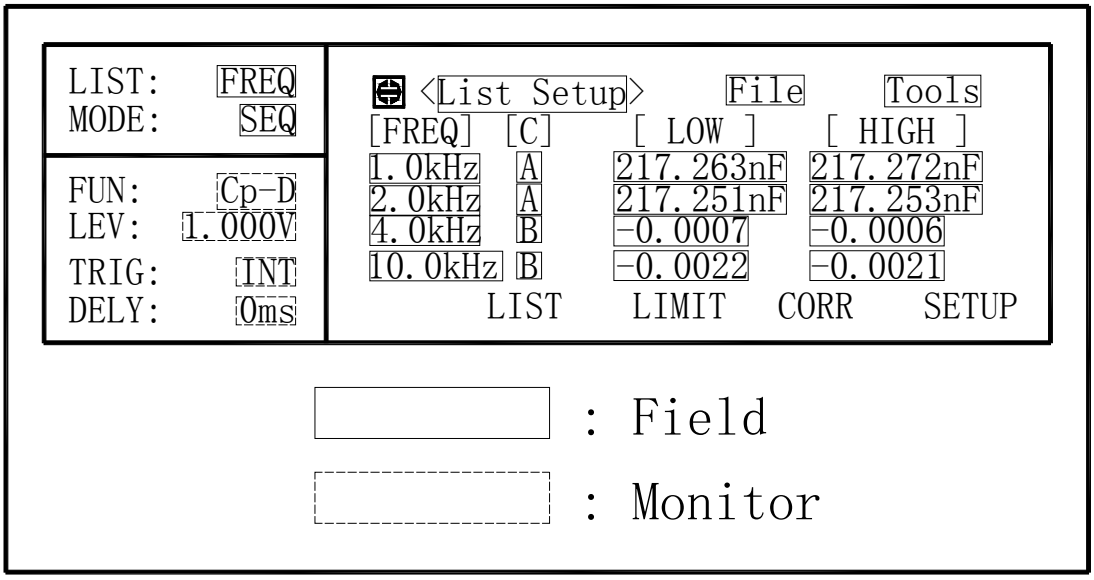

Figure 4-25. Available Fields on the List Setup Page

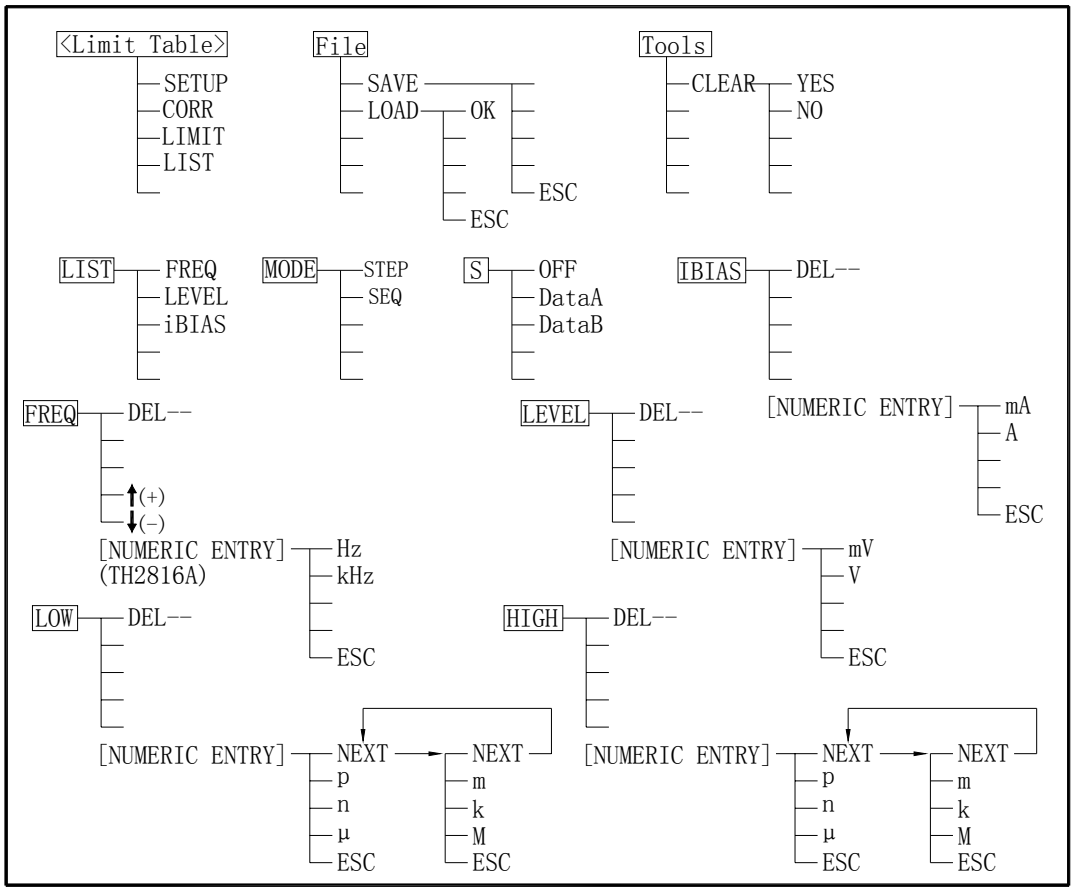

Figure 4-26. Available Softkeys on the List Setup Page

4.4.4.1 Sweep Parameter Selection

The sweep point parameter for the list sweep measurement can be set to the test

frequency, oscillator voltage level, and DC current bias. This field allows you to set the parameter of the list sweep measurement.

Front Panel Operation for Setting the List Sweep Parameter
Perform the following steps to set the list sweep parameter.
1) Move the cursor to the ***LIST*** field. The following softkeys will be displayed.
   - iBIAS
   - LEVEL
   - FREQ
2) Select and press a softkey to set the list sweep measurement sweep parameter.

4.4.4.2 Sweep Mode

TH2816A has a List Sweep measurement function which permits up to 4 test frequencies, oscillator voltage levels, or DC bias current points to be automatically measured. There are two sweep modes for the list sweep measurements: sequential (SEQ) mode and step (STEP) mode. In the case of the sequential mode, when TH2816A is triggered once, the device is automatically measured at all sweep points. In the case of the step mode, the sweep point is increased each time TH2816A is triggered.

Front Panel Operation for Setting the List Sweep Measurement Mode.
Perform the following steps to set the list sweep measurement mode to the sequential mode, or to the step mode.
3) Move the cursor to the ***MODE*** field. The following softkeys will be displayed.
   - SEQ
   - STEP
4) Select and press a softkey to set the list sweep measurement mode.

4.4.4.3 Sweep Points and Limit Mode

The list sweep function permits entry of up to 4 points and measurement limits.

Note: When only the low limits of the sweep points are set, the devices whose selected parameter's data are equal, or are above the low limits are sorted as IN.
When only the high limits of the sweep points are set, the devices whose selected parameter's data are equal, or are below the high limits are sorted as IN.
The comparison results are always IN when the parameter selection for the limit function is performed, but the low/high limit values aren't entered.
Do not enter a value which is lower than the LOW limit into the HIGH limit. If you do, the warning message “Warning: Low>High” will be displayed (this isn't an error). The comparison results are as follows.
Measurement results < LOW limit, Result: LOW
Measurement results ≥ LOW limit, Result: HIGH

Front Panel Operation for Setting the Sweep Points
Perform the following steps to set the sweep points and measurement limits.
1) Move the cursor to the ***LIST*** field and set the sweep parameter.
2) Move the cursor to the ***sweep point*** field.
3) Enter the frequency sweep point using the ↑(+) and ↓(-) softkeys. Enter the iBias current or voltage level point using the numeric entry keys. When the one of the numeric entry keys is pressed, the unit softkeys (V, mV, A, and mA) are available, so you can use these softkeys to enter the unit and terminate the entry without hitting ENTER.
4) The cursor will move automatically to the next ***sweep point***, and ***C*** field is automatically set to “A” (DateA) at the same time.

5) When the forth sweep point is inputed, the cursor will move automatically to the ***C*** field of the first sweep point. The following softkeys will be displayed.
   - DATA A
     This softkey is used to set the limit parameter to the primary parameter of the measurement function.
   - DATA B
     This softkey is used to set the limit parameter to the secondary parameter of the measurement function.
   - OFF
     This softkey is used to set the list sweep measurement's limit function to OFF for the sweep point.
6) Move the cursor to the ***C*** field of other sweep points, and set the limit parameter for each sweep point.
7) Move the cursor to the ***LOW*** field. Press the DEL-- softkey to delete the HIGH and LOW limits for this sweep point. (If you select OFF for the limit parameter, LOW limit can not be inputted at this sweep point.) Enter the low limit value.
8) The cursor will move automatically to the ***HIGH*** field. Press the DEL-- softkey to delete the HIGH and LOW limits for this sweep point. (If you select OFF for the limit parameter, HIGH limit can not be inputted at this sweep point.) Enter the high limit value using the numeric entry keys.
9) Repeat step 7 and 8 to set the LOW/HIGH limits for the other sweep points.

4.4.4.4 File Management

This function is the same as the function on the ***MeasDisplay*** page. (Refer to 4.3.1.8 File Management.)

4.4.4.5 Useful Tools

The ***Tools*** field on this page allows you to clear all of the list sweep points and limit. Perform the following steps from the ***List Setup*** page to clear all of the list sweep points and limits.

1) Move the cursor to the ***Tools*** field. The following softkey will be displayed.
   - CLEAR
2) Press CLEAR, “Confirm: CLR Table?” will be displayed in the message window. The following softkeys will be displayed.
   - NO
   - YES
3) Press NO to cancel the CLEAR operation.
4) Press YES to clear all of the list sweep points and limits.

4.5 SYSTEM Menu

This chapter provides information on the function of each page of SYSTEM. The following three pages can be called from SYSTEM.

- ***System Configuration***
- ***Files List***
- ***Self Test***
- ***Debug***

This chapter describes the functions on each page in the order of the preceding list of display pages.

4.5.1 System Configuration Page

When you press SYSTEM, the ***System Config*** page will be displayed. On this ***System Config*** page, the following control functions can be set. (The field in parenthesis is used to set the control function.)

- LCD Contrast Function (***CONTRAST***)

- Information Beeper Function ON/OFF (***INFO BEEP***)
- Comparator Alarm Function ON/OFF (***CMP ALARM***)
- Password Function (***PASSWORD***)
- Bus Mode Function (***BUS MODE***)
- GPIB address (***GPIB ADDR***)
- GPIB talk only mode ON/OFF (***TALK ONLY***)

So there are eight fields on this page: ***<System Config>***, ***CONTRAST***, ***INFO BEEP***, ***CMP ALARM***, ***PASSWORD***, ***BUS MODE***, ***GPIB ADDR***, and ***TALK ONLY*** fields.
Each control function is described in the following paragraphs.
The available fields and the softkeys which correspond to each field on this page are shown in Figure 4-27 and Figure 4-28.

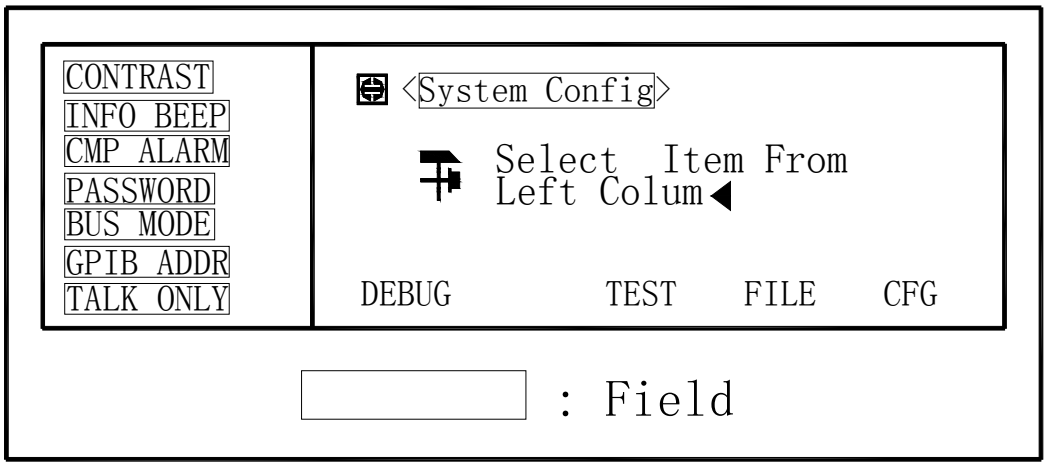

Figure 4-27. Available Fields on the SYSTEM CONFIG Page

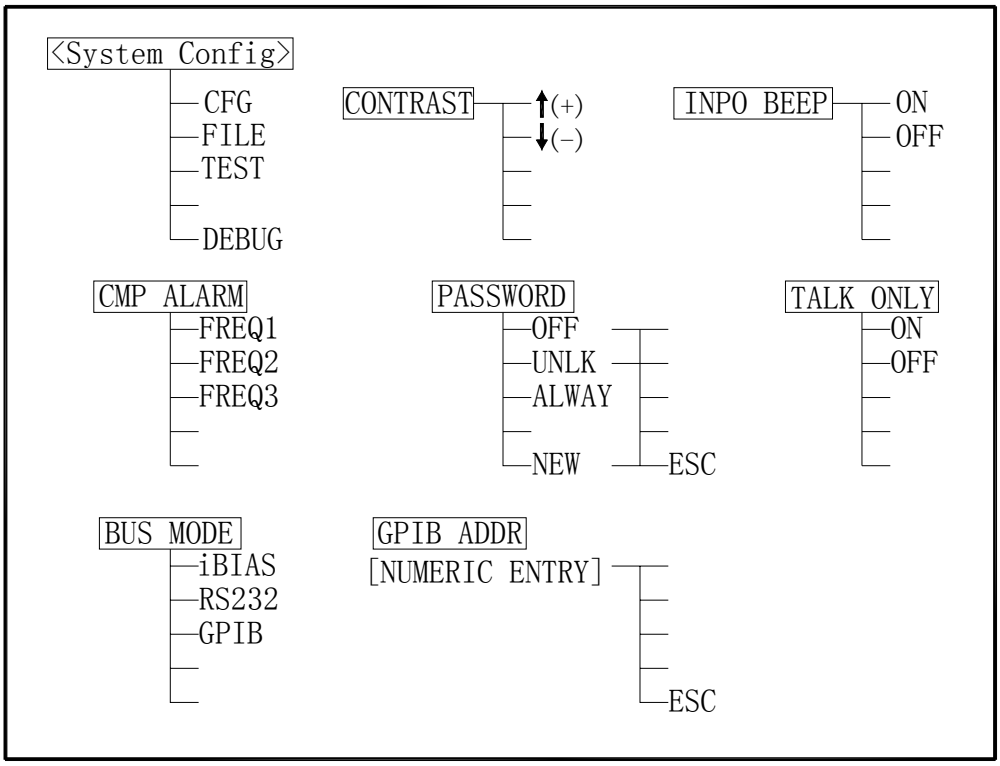

Figure 4-28. Available Softkeys on the SYSTEM CONFIG Page

4.5.1.1 LCD Contrast Function

TH2816A's Contrast Function allows you to adjust the LCD contrast in order to get a

clear display. You can adjust the LCD contrast from 0 to 31.

Perform the following steps to adjust the LCD contrast.

1) Move the cursor to the ***CONTRAST*** field, the following softkeys will be displayed.
   - ↓(-)
     This softkey is used to decrease LCD contrast in 1 step.
   - ↑(+)
     This softkey is used to increase LCD contrast in 1 step.
2) Use the softkeys to adjust the LCD Contrast as required.

4.5.1.2 Information Beeper Function ON/OFF

TH2816A beeps when a warning message is displayed or an error has occurred.

Perform the following steps to set beeper function to ON or OFF.

1) Move the cursor to the ***INFO BEEP*** field, the following softkeys will be displayed.
   - ON
   - OFF
2) Use the softkeys to set the information beeper function to ON and OFF.

4.5.1.3 Comparator Alarm Function ON/OFF

TH2816A alarms when the comparator result is the same as the preset alarm status.
Perform the following steps to set the alarm status to be alarmed.

1) Move the cursor to the ***CMP ALARM*** field, the following softkeys will be displayed.
   - AUX
   - OUT
   - IN
   - OFF
2) Use the softkeys to set the alarm status you want.

4.5.1.4 Password Function

TH2816A's password function can be used to prevent unauthorized person to turn on the instrument, or to prevent unauthorized person to operate from the front panel keyboard.

Perform the following steps to set the password function or change the password.

1) Move the cursor to the ***PASSWORD*** field, the following softkeys will be displayed.
   - NEW
   - ALWAY
   - UNLK
   - OFF
2) Press softkey NEW. Message "Old Password:" is displayed in the message window. The old password is required to input correctly. Press the ESC softkey, if you want to cancel the change password operation.
3) When the old password is inputted correctly, message "New Password:" is displayed in the message window. Use the numeric entry keys to input the new password. Press the ESC softkey, if you want to cancel the change password operation.
4) When the new password is inputted, the message "Confirm Password:" is displayed in the message window. Press the ESC softkey, if you want to cancel the change password operation. The new password must be inputted correctly again, before the new password is valid.
5) Press AWAY. The password is required both to turn on the TH2816A and to

unlock the key operation on front panel. “ALWAYS” will be displayed on the LCD.

6) Press UNLK. Message “Enter Password:” will be displayed, when you change the password status from “AWAYS” to “UNLOCK”. When the password status is “UNLOCK” status, the password is required only to unlock the key operation on front panel.
7) Press OFF. Message “Enter Password:” will be displayed, when you change the password status from “AWAYS”/“UNLOCK” to OFF. When the password status is “OFF” status, no password is required both to turn on the instrument and to unlock the key operation on front panel.

Note: The default password for TH2816A is 2816.

4.5.1.5 Bus Mode Function

TH2816A provides three Bus modes: GPIB, RS232 and iBIAS. Only one of the three bus modes can be selected at the same time.

Perform the following steps to select the bus mode of TH2816A.

1) Move the cursor to the ***BUS MODE*** field, the following softkeys will be displayed.
   - GPIB
   - RS232
   - iBIAS
2) Press iBIAS. The RS232 interface is used to control the programmable DC bias current source. (Such as TH1773)
3) Press RS232. The RS232 interface is used to communicate with a computer as a standard serial interface.
4) Press GPIB. The GPIB interface is used to communicate with computers and other instruments as a parallel interface. (When the optional GPIB board is equipped.)

4.5.1.6 GPIB address

TH2816A with GPIB interface can be controlled via the GPIB bus.

The GPIB address can be set on this page

Perform the following steps to set the GPIB address.

1) Move the cursor to the ***GPIB ADDR*** field, the current address will be displayed on the LCD. The default address is 8.
2) Input the new address from 0 to 30 using the numeric keys.

4.5.1.7 Talk only mode ON/OFF

When TH2816A is set to the talk only mode, TH2816A outputs the measurement result after each measurement and doesn’t receive any commands from the Bus.

Perform the following steps to set the Talk only mode.

1) Move the cursor to the ***TALK ONLY*** field, the current setting will be displayed on the LCD. The following softkeys will also be displayed.
   - ON
   - OFF
2) Use the softkeys to set the Talk only mode to ON (Talk only) or to OFF (addressable).

4.5.2 Files List Page

When you press SYSTEM, and FILE, the ***File List*** page will be displayed. On this ***File List*** page, the files of TH2816A's internal memory are listed and file functions (Delete, Rename, and Load) can be performed from this page.

There are two fields on this page: ***<File List>*** and ***No***. fields.

This page also provides the following monitor information.

- Maximum file number (***MAX***)
- Saved file number (***USED***)
- Free file number (***FREE***)

- Memory status (**S**)
- File name (***FILE NAME***)

The available fields and the softkeys which corresponded to each field on this page are shown in Figure 4-29 and Figure 4-30.

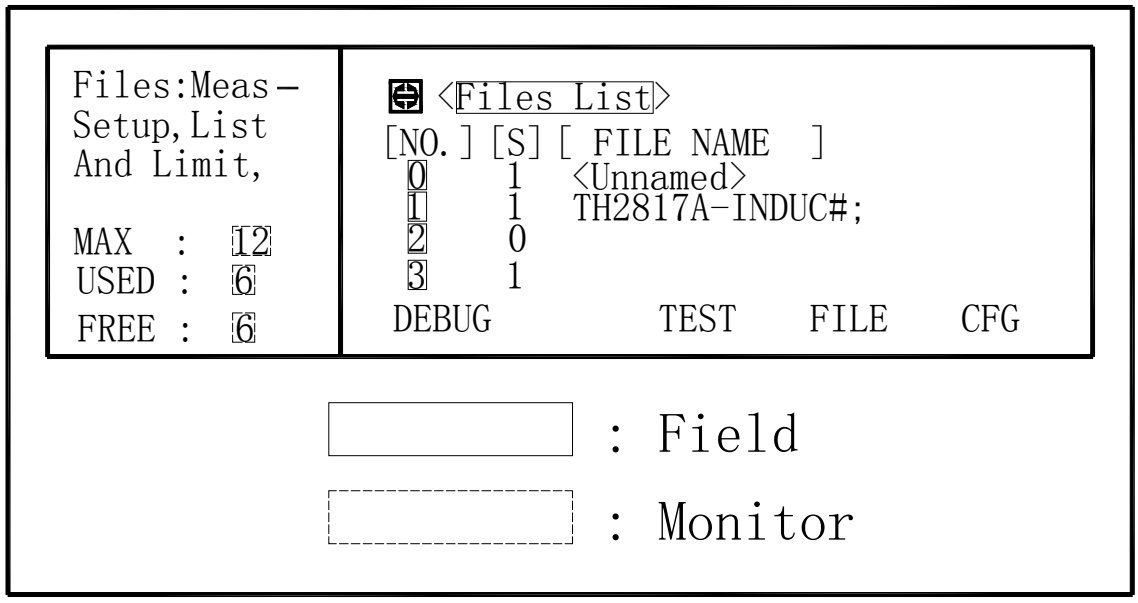

Figure 4-29. Available Fields on the File List Page

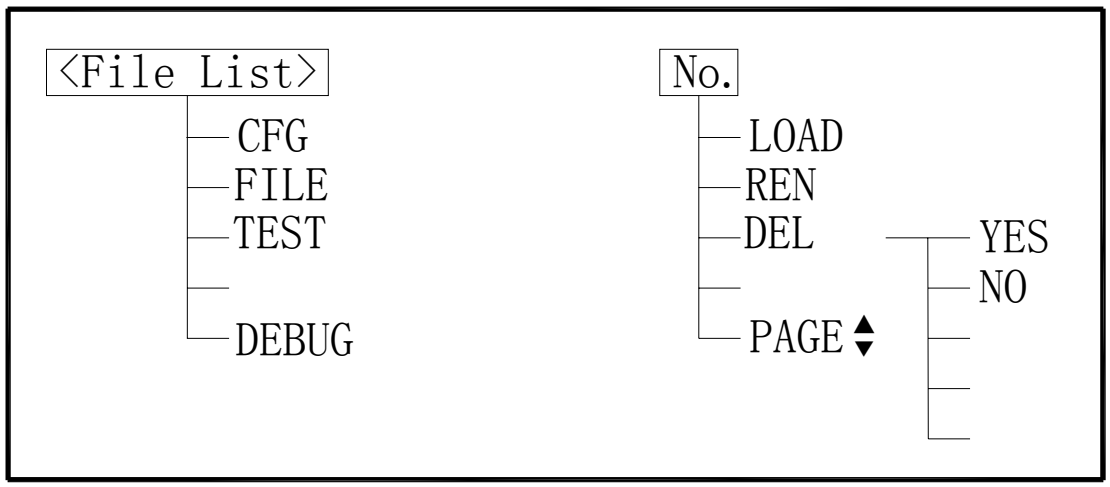

Figure 4-30. Available Softkeys on the File List Page

4.5.2.1 File Manage Function

Load, delete, and rename file functions can be performed from this ***File List*** Page

Perform the following steps to manage the files.

1) Move the cursor to the ***No.*** field. The following softkeys will be displayed.
   - PAGE
   - DEL
   - REN
   - LOAD
2) Use softkey PAGE to select which of the three file list pages to be displayed. Use

the arrow keys to move the cursor to the file you want to delete from the internal memory.

3) Press DEL to delete the current selected file, and message “Confirm: Delete it?” will be displayed in the message window. The following softkeys are displayed.
   - YES
   - NO
4) Press YES to delete the file, and press NO to cancel the delete operation.
5) Move the cursor to the file you want to rename.
6) Press REN, and input the new name using the numeric entry keys and softkeys.
7) Move the cursor to the file you want to LOAD.
8) Press LOAD, the current control settings and limits are replaced by the control settings and limits saved in the file.

4.5.3 Self test Page

The functions on this ***Self Test*** Page are not available for users.

4.5.4 DEBUG Page

The functions on this ***Debug*** Page are not available for users.

Chapter 5 Remote Control

TH2816A has the RS232C serial interface and the parallel GPIB (optional) interface. Both interfaces can be used to remotely control TH2816A, but they can not be used at the same time. The two interfaces share the same program commands, but they have different hardware configurations and different communication protocols. This chapter provides the information about the two interfaces and how to use the interfaces. For the available commands, refer to Chapter 6 Command reference.

5.1 RS232C Interface Introduction

The RS232C interface can be used to remotely control the TH2816A, and it also can be used to control the DC current bias sources manufactured by our company such as TH1773/TH1775 DC current bias source. All operations from the front panel can be performed by a computer via the serial interface.

5.1.1 RS232C Connection

RS232C Standard now is widely used as the serial communication standard. RS232 stands for Recommend Standard number 232 and C is the latest revision of the standard. The serial ports on most instruments use a subset of the RS-232C standard. The full RS-232C standard specifies a 25-pin "D" connector of which 22 pins are used. Most of these pins are not needed for normal serial communications, and the common RS232 signals are listed as follows.

Function	Code	25 Pin Connector Pin Number	9 Pin Connector Pin Number
Request To Send	RTS	4	7
Clear To Send	CTS	5	8
Data Set Ready	DSR	6	6
Data Carrier Detect	DCD	8	1
Data Terminal Ready	DTR	20	4
Transmitted Data	TXD	3	3
Received Data	RXD	2	2
Signal Ground Common	GND	7	5

TH2816A only uses the smallest subset of the RS232C standard, the signal are listed as follows.

Function	Code	9 Pin Connector Pin Number
Transmitted Data	TXD	3
Received Data	RXD	2
Signal Ground Common	GND	5

TH2816A's RS232 interface may be different with the standard RS232C. The pin configuration is shown as follows.

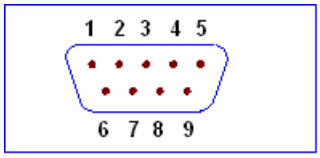

5.1.2 Communication with a Computer

- Diagram of connection to a controller.

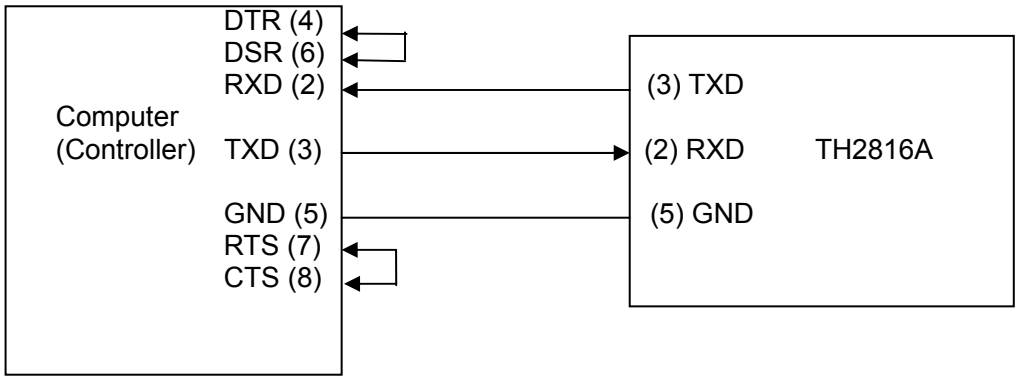

There may be some difference between TH2816A RS232 interface and a standard RS232C interface. You can make the connection cable by yourself according the diagram or order one from our company.

Note: Pin 4 and 6, pin 7 and 8 are shorted respectively at the end of controller.

- When the RS232C interface is used to communicate with a controller, RS232 bus mode should be selected as follows.
  1) Press SYSTEM menu key, the ***System Config*** page will be displayed.
  2) Move the cursor to the ***BusMode*** field.
  3) Press RS232 to select the bus mode to RS232 bus mode.

- Serial Interface Specifications

Baud Rate	9600 bps
Date Bits	8 Bits
Stop Bits	1 Bit
Parity Bit	None
End of Sequence	NL (ASCII Code 10)
Connector	DB9

- Software Protocol
  1) For command configuration and format, refer to chapter 6 Command Reference.
  2) The controller sends the command using the ASCII code with NL as the end character. TH2816A executes the command after the end character NL is received.
  3) The character received by TH2816A will be sent back to the controller again. The controller will not send the next character until the last return character is received correctively from TH2816A. If the controller cannot receive the character sent back by TH2816A, the reasons may be as follows.
     A. The serial interface is not connected correctly.
     B. Check if the RS232 function is turned on and TALK ONLY function is turned off.
     C. When TH2816A is executing a bus command, TH2816A will not accept any character through the serial interface at the same time and the

character sent by controller will be ignored. In order to make sure the whole command is sent and received correctly, the character without a return character should be sent again by the controller.

4) TH2816A sends information under following two conditions. The first is when a character is received normally; TH2816A will send the character back as response. The second is when a query command is received; TH2816A will send the query response information.
5) Once a query command is received, TH2816A will send the query response information immediately even if the whole command has not been executed. So if the command includes two queries, the controller should read the query responses twice. One query is recommended to be included in a single command.
6) A query response is sent out in ASCII codes with NL as the terminal character.
7) Several query responses will be sent continuously with 1ms interval. The controller should be ready to receive the responses; otherwise the response information will be lost.
8) The controller should receive the query response terminal character NL. Otherwise you will confuse a terminal character NL with a returned character. At the same time the controller should receive the last returned character before receiving a query response.
9) For some commands that will take a long time to execute, for example Correction command, the controller should keep waiting to avoid the next command being lost when TH2816A is executing the former command.

- Sample Program for Serial Interface
  The following is a C language sample program under DOS environment. The main function may be expanded by users, and the other sub functions teach you how to input or output a character string via the RS232 interface.

```
#define PORT 0
#include "dos.h"
#include "stdio.h"
#include "stdlib.h"
#include "ctype.h"
#include "conio.h"

void port_init( int port,unsigned char code );
int check_stat( int port );              /* read serial port state(16bit) */
void send_port( int port,char c );   /* send a character to serial port */
char read_port( int port );              /* recive a character form serial port */

void string_wr( char *ps );              /* write a string to serial port */
void string_rd( char *ps );              /* read a string from serial port */
char input[256];                    /* quary recieve bufer */

main()
{ port_init( PORT,0xe3 );/* initilize serial port:baud = 9600,no verify,1 bit stop,8 bit data */

   string_wr( "trig:sour bus;*trg" );
   string_rd( input );
   printf( "\n%s",input );

   string_wr( "freq 10khz" );
   string_wr( "func:imp:type rx;:func:smon on" );
   string_wr( "voltage:level 500mv" );
```

```
}


/* write string to serial port */
void string_wr( char *ps )
{ char c;
   int m,n;
   while( check_stat(PORT) & 256 ) read_port( PORT );/* read data until null */
   for( ;*ps;   )
   { c = 0;
      for( m = 100;m;m-- )
      { send_port( PORT,*ps );
         for( n = 1000;n;n-- )
         { delay( 2 );   /* wait about 2ms, use dos.h libray funtion */
            if( kbhit() && ( getch() == 27 ) )   /* if escape key keypress */
            { printf( "\nE20:Write Canceled!" );
               exit(1);
            }
            if( check_stat(PORT) & 256 )
            { c = read_port( PORT );
               break;
            }
         }
         if( n ) break;
      }
      if( c == *ps ) ps++;
      else
      { printf( "\nE10:Write Echo Error!" );
         exit(1);
      }
   }
   send_port( PORT,'\n' );/* send command end symbol */
   delay( 2 );
   while( !(check_stat(PORT) & 256) );
   read_port( PORT );
}

/* read string from serial port */
void string_rd( char *ps )
{ unsigned char c,i;
   for( i = 0;i < 255;i++ )   /* max read 256 characters */
   {   while( ! (check_stat(PORT) & 256) )      /* wait serial recieve ready */
        if( kbhit() && (getch() == 27) )       /* if escape key keypress */
        { printf( "\nE21:Read Canceled!" );
           exit(1);
        }

      c = read_port( PORT );
      if( c == '\n' ) break;
      *ps = c;
      ps++;
   }
   *ps = 0;
}

/* send a character to serial port */
void send_port( int port,char c )
```

```
{
   union REGS r;
   r.x.dx = port;              /* serial port */
   r.h.ah = 1;                  /* int14 function1:send character */
   r.h.al = c;                 /* character to be sent */
   int86( 0x14,&r,&r );
   if( r.h.ah & 128 )        /* check ah.7,if set by int86( 0x14,&r,&r ),mean trans error */
   { printf( "\nE00:Serial port send error!" );
      exit(1);
   }
}

/* read a character from serial port */
char read_port( int port )
{ union REGS r;
   r.x.dx = port;              /* serial port */
   r.h.ah = 2;                  /* int14 function2:read character */
   int86( 0x14,&r,&r );
   if( r.h.ah & 128 )        /* if ah.7 be set,mean trans error */
   { printf( "\nE01:Serial port read error!" );
      exit(1);
   }
   return r.h.al;
}

/* check the status of serial port */
int check_stat( int port )
{ union REGS r;
   r.x.dx = port;              /* serial port */
   r.h.ah = 3;                  /* int14 function3:read status */
   int86( 0x14,&r,&r );
   return r.x.ax;              /* ax.7 show serial operation, ax.8 show serial recive ready
*/
}

/* initialize the serial port */
void port_init( int port,unsigned char code )
{ union REGS r;
   r.x.dx = port;           /* serial port */
   r.h.ah = 0;               /* int14 function0:initial serial port */
   r.h.al = code;           /* initialization code */
   int86( 0x14,&r,&r );
}
```

5.1.3 Communication with a DC Bias Current Source

When you want to perform a DC bias current list sweep measurement, the RS232C can be used to control a DC Bias Current Source. The following diagram shows how TH2816A and TH1773 are connected via the RS232C interface.

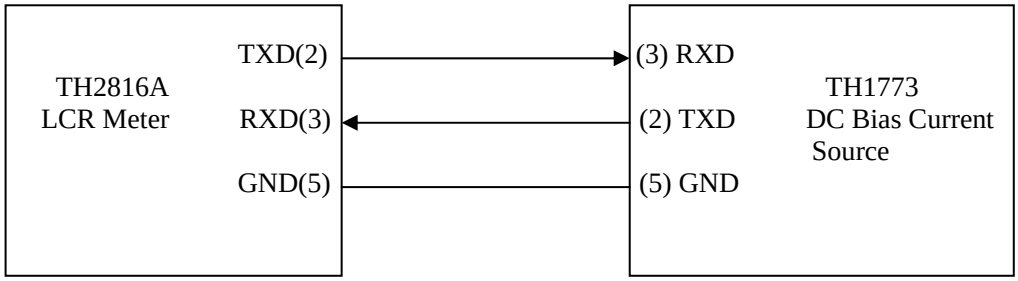

Perform the following steps to realize the DC bias current list sweep measurement.

1) Only on the ***List Sweep*** page, TH2816A has the capacity to control the DC Bias Current Source via the RS232C interface.
2) Connect TH2816A and TH1773 according the above diagram.
3) Set TH2816A's bus mode to iBIAS mode. Press SYSTEM menu key, the ***System Config*** page will be displayed. Move the cursor to the ***BusMode*** field, and use the softkey iBIAS to set the bus mode to iBIAS mode.
4) Set TH1773's serial function to ByLCR mode (Refer to TH1773 user manual.).
5) Set a list sweep measurement limit table on the ***List Setup*** page, and perform the measurements on the ***List Sweep*** page.

When perform the DC bias current list sweep measurement, delay time should be set in order to get stable measurement results.
SEQ or STEP sweep mode can be selected.

5.2 GPIB Interface Introduction

5.2.1 GPIB Connection

When configuring a GPIB system, the following restrictions must be adhered to.

- The total length of cable in one bus system must be less than or equal to two meters times the number of devices connected on the bus (the GPIB controller counts as one device) and the total length of cable must not exceed 20 meters.
- A maximum of 15 devices can be connected on one bus system.
- There are no restrictions on how the cables are connected together. However, it is recommended that no more than four piggyback connectors be stacked together on any one device. The resulting structure could exert enough force on the connector mounting to damage it.

Figure 5-1 shows a GPIB interface connector.

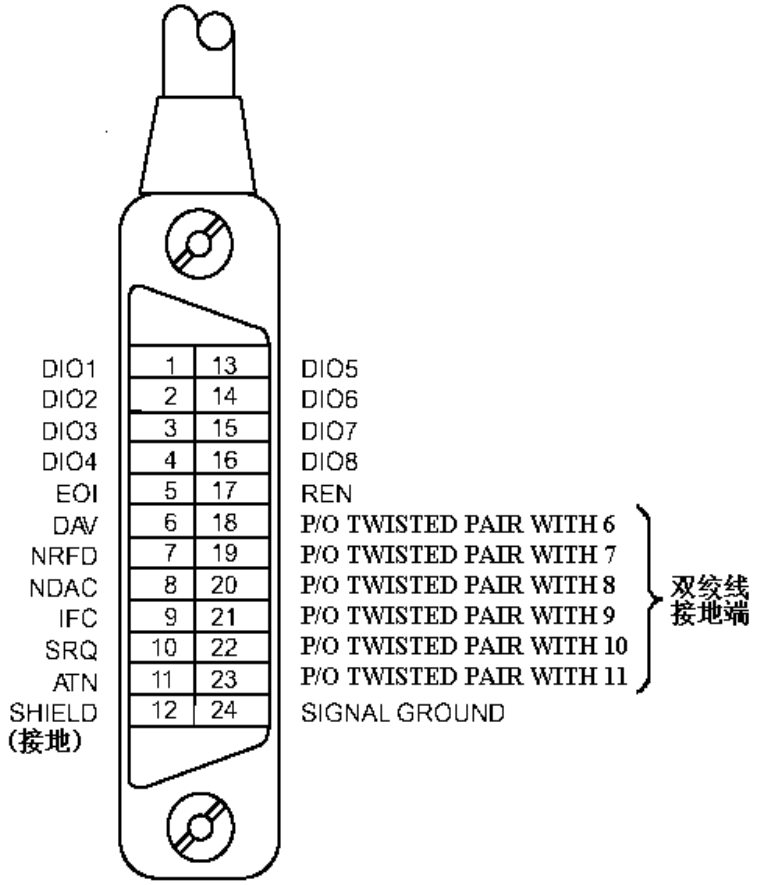

Figure 5-1. GPIB Connector Signal/Pin Configuration

Typical GPIB system interconnection is shown in Figure 5-2 and Figure 5-3. The GPIB connector is firmly fastened using two bolts to keep it from working loose during use.

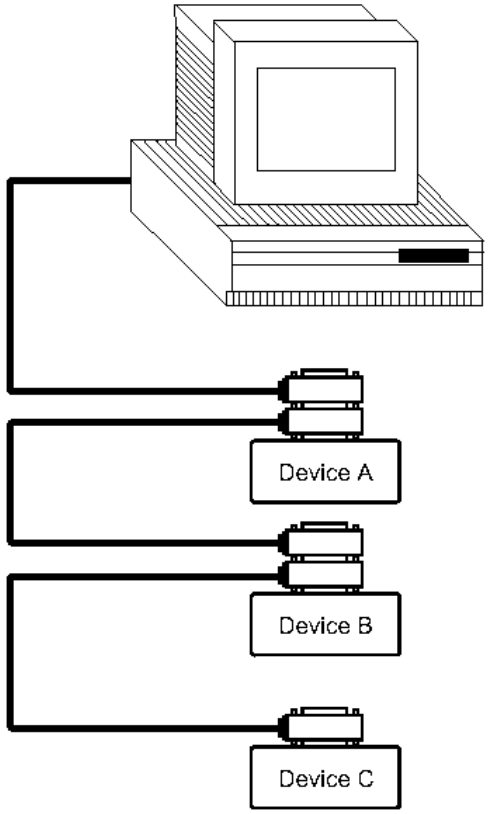

Figure 5-2. Typical GPIB System Interconnection-1

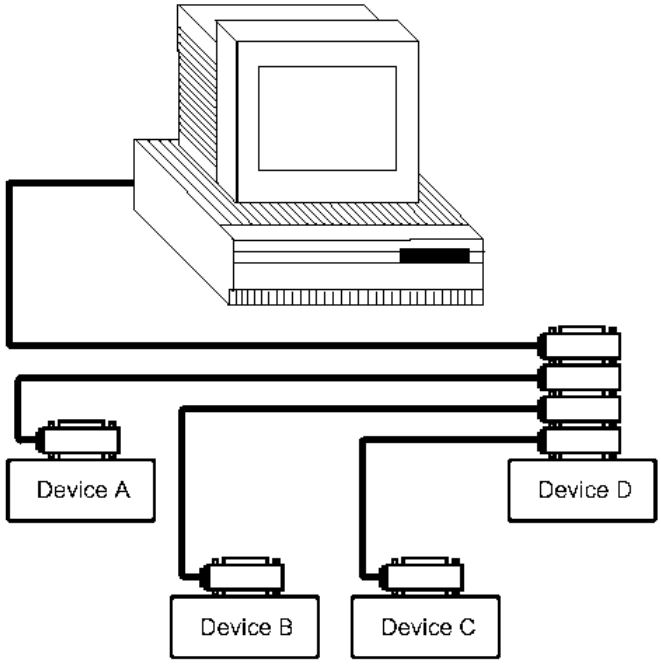

Figure 5-3. Typical GPIB System Interconnection-2

5.2.2 GPIB Interface Capabilities Functions

Table 7-1 lists TH2816A's GPIB capabilities and functions. These functions provide the means for an instrument to receive, process, and transmit commands, data, and status over the GPIB bus.

Table 7-2. GPIB Interface Capability

Code	Function
SH1	Complete Source Handshake capability
AH1	Complete Acceptor Handshake capability
T5	Basic Talker; Talk-Only; unaddressed if MLA; no serial poll
L4	Basic Listener; unaddressed if MTA; no Listen Only
SR0	No Service Request capability
RL1	Remote/Local capability
DC1	Device Clear capability
DT1	Device Trigger capability
C0	No Controller capability
E1	Drivers are open-collector

5.2.3 GPIB Addressing

TH2816A's GPIB address is stored in non-volatile memory and can be set to any address from 0 to 30 by front panel key entry in the ***System Config*** page. When TH2816A is shipped from the factory the default GPIB address is 8. For more information, refer to " 4.4.1.6 GPIB Address" in Chapter 4.

5.2.4 GPIB Bus Function

TH2816A will respond to the following bus commands.

- ABORT I/O (IFC)
  ABORT I/O (IFC control line TRUE) halts all bus activity and deselects TH2816A.
- DEVICE CLEAR (SDC or DCL)
  This command can be used with an address to clear a particular device (SDC : selected device clear) or used without an address (DCL : clears all devices). The Input buffer is cleared, output data buffer is cleared and bit 4 (MAV bit) of the status byte is set to "0", when TH2816A receives this command.
- LOCAL (GTL)
  LOCAL returns control of a listening device to front panel control.
- LOCAL LOCKOUT (LLO)
  LOCAL LOCKOUT disables the LOCAL operation of all devices on the bus. After this command is sent you will be unable to operate TH2816A from the front panel include the softkey LOCAL. Execute the LOCAL command to undo LOCAL LOCKOUT.
- REMOTE
  REMOTE sets TH2816A to the remote mode. When this command is sent, front panel with the exception of LOCAL softkey will be disabled.
- TRIGGER (GET)
  Enables TH2816A to the TRIGGER bus command. This command may be sent to a selected device or to all devices addressed as listeners on the GPIB bus. TH2816A must first be addressed as a listener, second the trigger mode is set to the BUS trigger mode before the trigger message is sent. This command is equal to the SCPI command TRIG+FETCh? or the common command *TRG.

5.3 Data Format

Th2817 outputs the measurement results using the ASCII via the GPIB bus. The Format 1 is used by ***MeasDisplay*** page, ***BinNo. Disp*** page and ***Bin Count*** page,

while Format 2 is used by ***List Sweep*** page. The two formats are described respectively as follows.

5.3.1 Format 1

The ASCII data output format on the ***MeasDisplay*** page, ***BinNo. Disp*** page, or ***Bin Count*** page is described in Figure 5-4.

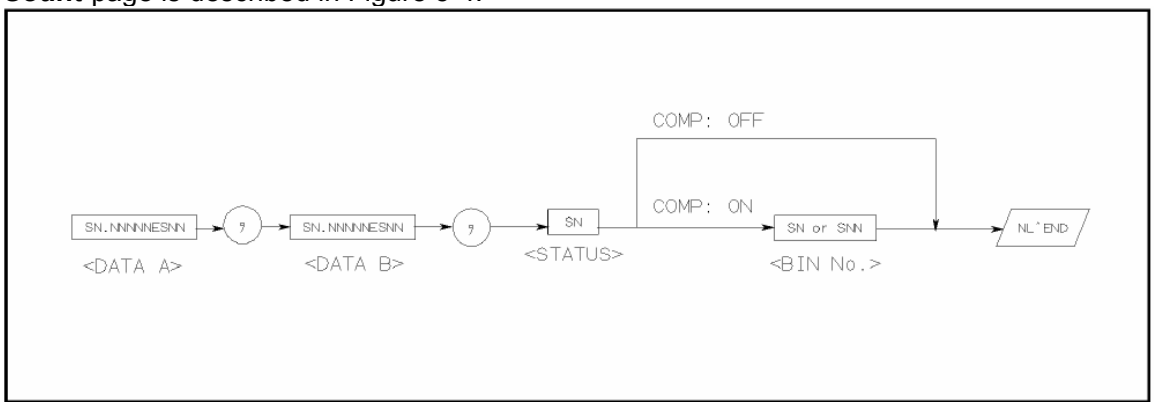

Figure 5-4 ASCII Data Format 1

The <DATA A>, <DATA B>, and <BIN> formats are as follows.

- <DATA A> and <DATA B> format:

The data output formats for <DATA A> (primary parameter's measurement data), and <DATA B> (secondary parameter's measurement data) uses the 12 ASCII character fixed length format as follows.

SN.NNNNNESNN
(S: +/-, N: 0 to 9, E: Exponent Sign)

- <BIN> Format:

The <BIN No.> data shows the bin sorting results as follows.

Data	Sorting Results
1	BIN 1
2	BIN 2
3	BIN 3
4	AUX_BIN
5	OUT_OF_BINS

The <BIN No.> data is output with the measurement data only when the comparator function is set to ON.

5.3.2 Format 2

The ASCII data output format on the ***List Sweep*** page is described in Figure 5-5.

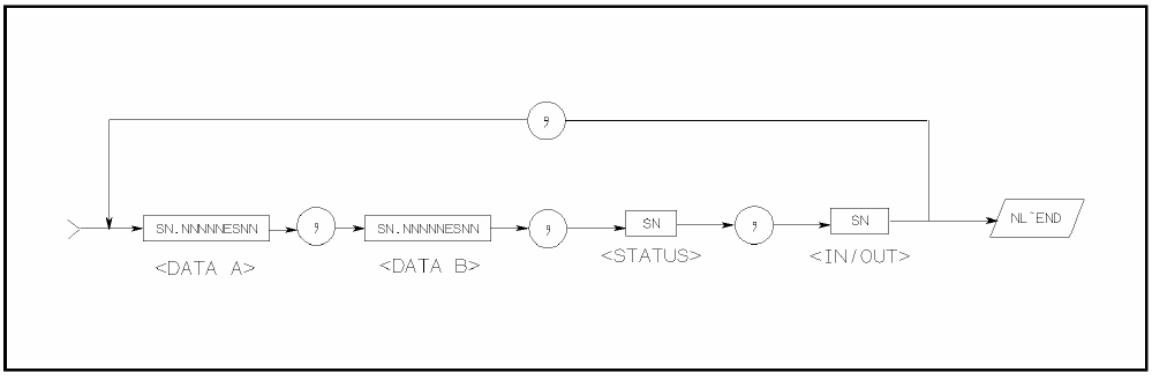

Figure 5-5 ASCII Data Format 2

The data loop is repeated for the number of the sweep points.
The <DATA A>, <DATA B>, <STATUS> formats are the same as the formats on the **MeasDisplay**, **Bin No. Disp**, or ***Bin Count*** page. So the only the <IN/OUT> format will be described.

- <IN/OUT> format:

Data	Result
-1	OUT
0	IN
+1	HIGH

The <IN/OUT> data shows the result of the list sweep's comparator function.
When the comparator function for the list sweep measurement isn't used, the <IN/OUT> use the 2 ASCII character fixed length format as follows.

SN (S:+/-, N: 0 to 1)

Chapter 6 Command Reference

This chapter provides descriptions of all TH2816A's available GPIB commands which correspond to Standard Commands for Programmable Instruments (SCPI) command sets, listed in functional subsystem order. Use this chapter as a reference.

6.1 Notation Conventions and Definitions

The following characters are used in the command syntax.

: A colon is used to separate the higher level commands and the lower level commands.

; The semicolon can be used as a separator to execute multiple commands on a single line.

* Asterisk is used to indicate that the command followed is a common command.

? A question mark is used to generate a query for the command in front of it.

, Comma is used to separate the muti-parameters in the command.
White space is used to separate the command and the parameter.

“” Double quotation marks indicate that the enclosed test is string data.

The following characters will be used in this chapter to describe GPIB commands.

NR1 Integer numeric data

NR2 fixed point numeric data

NR3 floating point numeric data

NL New Line character (decimal 10) is the end of the input/output string.

^END EOI terminator signal

< > Angular brackets enclose words or characters that are used to symbolize a program code parameter or a GPIB command.

[ ] Square brackets indicate that the enclosed items are optional. The square brackets with the asterisk (for example, [,<value>*]) means the enclosed item (<value>) repeats until the maximum counted number.

{} When several items are enclosed by braces, one and only one of these elements may be selected.

6.2 Command Structure

TH2816A commands are divided into two types: GPIB common commands and SCPI commands. The GPIB common commands are defined in IEEE std. 488.2-1987, and these commands are common for all devices. The SCPI commands are used to control all of the TH2816A's functions. The SCPI commands are tree structured three levels deep. (The highest level commands are called the subsystem commands in this manual.) So the lower level commands are legal only when the subsystem commands have been selected. A colon (:) is used to separate the higher level commands and the lower level commands. See Figure 6-1 for a sample.

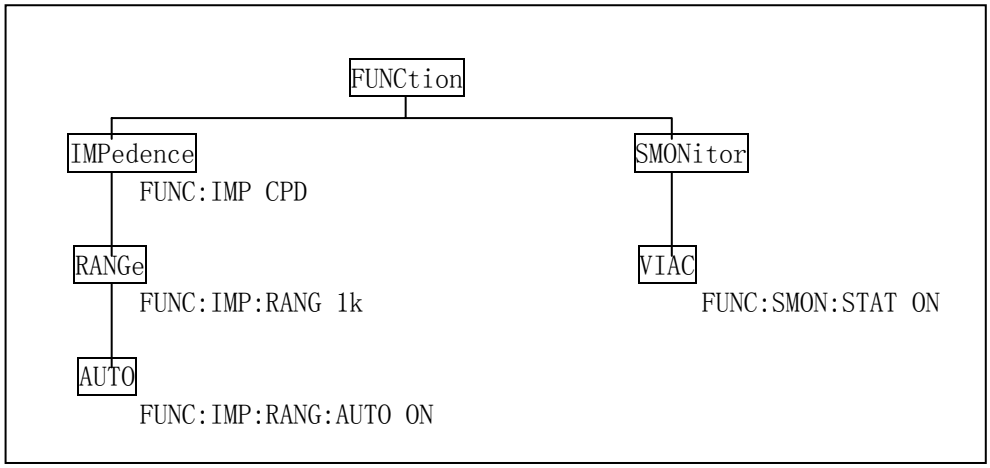

Figure 6-1. Command Tree Example

The basic rules of the command tree are as follows.

- Letter case (upper and lower) is ignored.
  For example,
  FUNC:IMP CPD = func:imp cpd = Func:Imp CpD
- Spaces (␣ is used to indicate a space) must not be placed before and/or after the colon (:).
  For example,
  (wrong) FUNC␣:␣IMP CPD
  (right) FUNC:IMP CPD
- The command can be completely spelled out or in abbreviated type.
  (The rules for command abbreviation are described later in this section)
  For example,
  FUNCTION:IMPEDANCE CPD = FUNC:IMP CPD
- The command header should be followed by a question mark (?) to generate a query for that command.
  For example,
  FUNC:IMP?

The semicolon (;) can be used as a separator to execute multiple commands on a single line. The multiple command rules are as follows.

- Commands at the same level and in the same subsystem command group can be separated by a semicolon (;) on a multiple command line.
  For example,
  CORR:SPOT1:STAT ON;FREQ 1KHZ
- To restart commands from the highest level, a semicolon (;) must be used as the separator, and then a leading colon (:), which shows that the restarted command is a command at the top of the command tree, must follow.
  For example,
  FUNC:IMP CPD;:FUNC:SMON:STAT ON
- The GPIB common commands can restart only after a semicolon on a multiple command line.
  For example,
  FUNC:IMP CPD;*trg;SMON ON

- The GPIB common commands keeps the previous commands level in a multiple command line.
  For example,
  FUNC:IMP CPD;*SRE 32;SMON:VAC ON;IAC ON

6.3 Command Abbreviations

Every command and character parameter has at least two forms, a short form and a long form. In some cases they will be the same. The short form is obtained using the following rules.

- If the long form has four characters or less, the long form and short form are the same.
- If the long form has more than 4 characters, and if the 4th character is a vowel, the short form is the first 3 characters of the long form. If the 4th character is not a vowel, the short form is the first 4 characters.
  For example:
  MODE abbreviates to MODE.
  TRIGger abbreviates to TRIG.
  LEVel abbreviates to LEV.
  FREQuency abbreviates to FREQ.
- If the long form mnemonic is defined as a phrase rather than a single word, then the long form mnemonic is the first character of the first word(s) followed by the entire last word. The above rules, when the long form mnemonic is a single word, are then applied to the resulting long form mnemonic to obtain the short form.
  For example:
  Percent TOLerance abbreviates to PTOL. (The long form is PTOLerance.)

Note: TH2816A accepts the three forms of the same SCPI commands: all upper case, all lower case, and mixed upper and lower case.

6.4 Suffix Units and suffix Multipliers

When numeric data is used as a parameter, the suffix multiplier mnemonics and suffix units (The suffix multiplier must be used with the suffix unit.) can be used for some commands as follows.

Table 6-1. Multiplier Mnemonics

Denition	Mnemonic	Used by TH2816A
1E18 (EXA)	EX	NO
1E15 (PETA)	PE	NO
1E12 (TERA)	T	NO
1E9 (GIGA)	G	NO
1E6 (MEGA)	MA	YES
1E3 (KILO)	K	YES
1E-3 (MILI)	M	YES
1E-6 (MICRO)	U	YES
1E-9 (NANO)	N	YES
1E-12 (PICO)	P	YES
1E-15 (FEMTO)	F	NO
1E-18 (ATTO)	A	NO
M or MA is available only when the suffix unit is HZ.		

Table 6-2. Suffix Multipliers without Suffix Units

Type of Command	Available Command	Example
Deviation reference value	FUNC:DEV1:REF FUNC:DEV2:REF	:REF 100p If the measurement function is Cp-D, then deviation reference value for primary parameter is 100pF
Standard value for load correction	CORR:SPOTn:LOAD:STAN	:STAN 0.1k,-12 If the measurement function for load correction is R-X, then standard value for load correction is 100Ω and -12Ω.
Limit value for list sweep	LIST:BANDn	:BAND1 A,100u,110u If the measurement function for list sweep measurement is L-Q, then the low limit for primary parameter is 100uH, and the high limit for primary parameter is 110uH.
Limit value for comparator	COMP:TOL:NOM COMP:TOL:BINn COMP:TOL:SLIM	:NOM 100m If the swapped measurement function for comparator is Cs-Rs, then the nominal value for Rs is 100mΩ.

Table 6-3. Suffix Units and Available Commands

Suffix Unit	Available Command
HZ	FREQ LIST:FREQ CORR:SPOTn:FREQ
V, mV	VOLT VOLT:LEV LIST:VOLT
A, mA, uA	LIST:BIAS
s,ms	TRIG:DEL
For TH2816A, only the fixed frequency value and unit configurations can be used. Refer to the FREQ subsystem commands.	

6.5 Command Reference

All commands in this reference are fully explained and listed in the following functional command order.

TH2816A Subsystem Commands

◇ DISPlay ◇ FREQuency ◇ VOLTage ◇ FUNCtion
◇ LIST ◇ APERture ◇ TRIGger ◇ FETCh?
◇ ABORt ◇ CORRection ◇ COMParator ◇ Mass MEMory

GPIB Common Commands

◇ *RST ◇ *TRG ◇ *IDN

The explanation of each subsystem command is patterned as follows.

1) Subsystem command name
2) Command Tree (Subsystem command only)
3) Compound Command Name
4) Command Description
5) Command Syntax
6) Example Using The Above Command Syntax
7) Query Syntax
8) Query Response
9) Example Using The Above Query Syntax

6.5.1 DISPlay Subsystem

The DISPlay subsystem command group sets the display page. Figure 6-2 shows the command tree of the DISPlay subsystem command group.

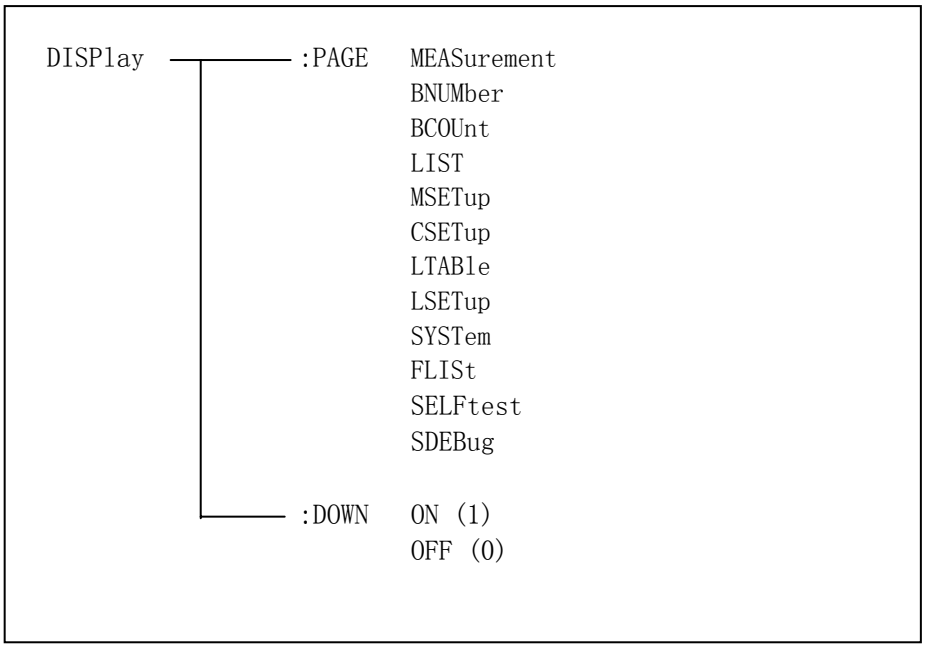

Figure 6-2. Display Subsystem Command Tree

:PAGE

The :PAGE command sets the display page. The :PAGE? Query returns the abbreviated page name currently displayed on the LCD screen.

Command Syntax

DISPlay:PAGE <page name>
Where, <page name> is:

MEASurement	Sets display page to MeasDisplay
BNUMber	Sets display page to BinNo. Disp
BCOunt	Sets display page to Bin Count
LIST	Sets display page to List Sweep
MSETup	Sets display page to Meas Setup
CSETup	Sets display page to User Correction
LTABle	Sets display page to Limit Table
LSETup	Sets display page to List Setup
SYSTem	Sets display page to System Config
SELFtest	Sets display page to Self Test
SDEBug	Sets display page to System DEBug

Example

WrtCmd("DISP:PAGE MEAS") Set display page to the ***MeasDisplay*** page.

Query Syntax

DISPlay:PAGE?

Query Response

Returned data format is :
<page name><NL^END>
Where,
<page name> Return the abbreviated name of the current display page as shown in the preceding list.

:DOWN

The :PAGE command sets the display character size of the measurement results. The :PAGE? Query returns the status of the display character size of the measurement results.

Command Syntax

DISPlay:DOWN {ON | OFF | 1 | 0}

Where,

1 (decimal 49) When the function is ON, normal character size is displayed.

0 (decimal 48) When the function is OFF, large character size is displayed.

Example

WrtCmd(“DISP:DOWN 1”) Set display character to normal size.

Query Syntax

DISPlay:DOWN?

Query Response

Returned data format is :

<NR1><NL^END>

6.5.2 FREQuency Subsystem

The FREQuency command sets the oscillator frequency. The FREQuency? query returns the current test frequency setting.

Command Syntax

FREQuency {<value> | MIN | MAX}

Where,

<value> The available values are listed as follows

50， 60，

100, 120, 200, 400, 500,

1000, 2000, 4000, 5000,

10000, 20000, 40000, 50000

100000,

50hz, 60hz,

100hz, 120hz, 200hz, 400hz, 500hz,

1khz, 2khz, 4khz, 5khz,

10khz, 20khz, 40khz, 50khz,

100khz

MIN Sets to the minimum value (50 Hz)

MAX Sets to the maximum value (100 kHz)

Example

WrtCmd (“FREQ 1KHZ”) Set test frequency to 1000 Hz

Note: When frequency list sweep measurement is sweeping, you cannot use this command to set the frequency. If you do so, “Cannot Executed” will be displayed in the message window.

Query Syntax
FREQuency?

Query Response
Returned Format is :
<NR1><NL^END>

6.5.3 VOLTage Subsystem

The VOLTage command sets the oscillator's output voltage level and output impedance. The VOLTage? query returns the current oscillator voltage level. Figure 6-3 shows the VOLTage Subsystem Command Tree.

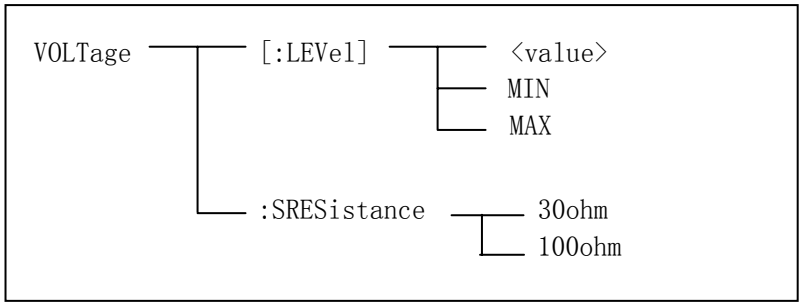

Figure 6-3 VOLTage Subsystem Command Tree

Command Syntax

VOLTage[:LEVel] { <value> | MIN | MAX }

Where,

<value> is the NR1, NR2, or NR3 format followed by V or mV, the value must be from 10 mV to 2 V.
MIN Sets or returns to the minimum oscillator voltage level (10 mV)
MAX Sets or returns to the maximum oscillator voltage level (2 V)

Example
WrtCmd("VOLT 1V) Set oscillator voltage level to 1 V.

Note: When oscillator voltage level list sweep measurement is sweeping, you cannot use this command to set the oscillator voltage level. If you do so, "Cannot Executed" will be displayed in the message window.

Query Syntax
VOLTage? or VOLTage:LEVel?

Query Response
Returned format is :
<NR3><NL^END>

:SRESistance

:SRESistance is used to set the signal source output resistance.

Command Syntax

VOLTage:SRESistance { 30 ohm | 100 ohm }

Example

WrtCmd("VOLT:SRES 30 ohm") Set signal source output resistance to 30 ohm.

Query Syntax

There is no query command for signal source output resistance function.

6.5.4 FUNCtion Subsystem

The FUNCtion subsystem command group sets the measurement function, the measurement range, monitor ON/OFF control, and the deviation measurement control. Figure 6-4 shows the command tree of the FUNCtion subsystem command group.

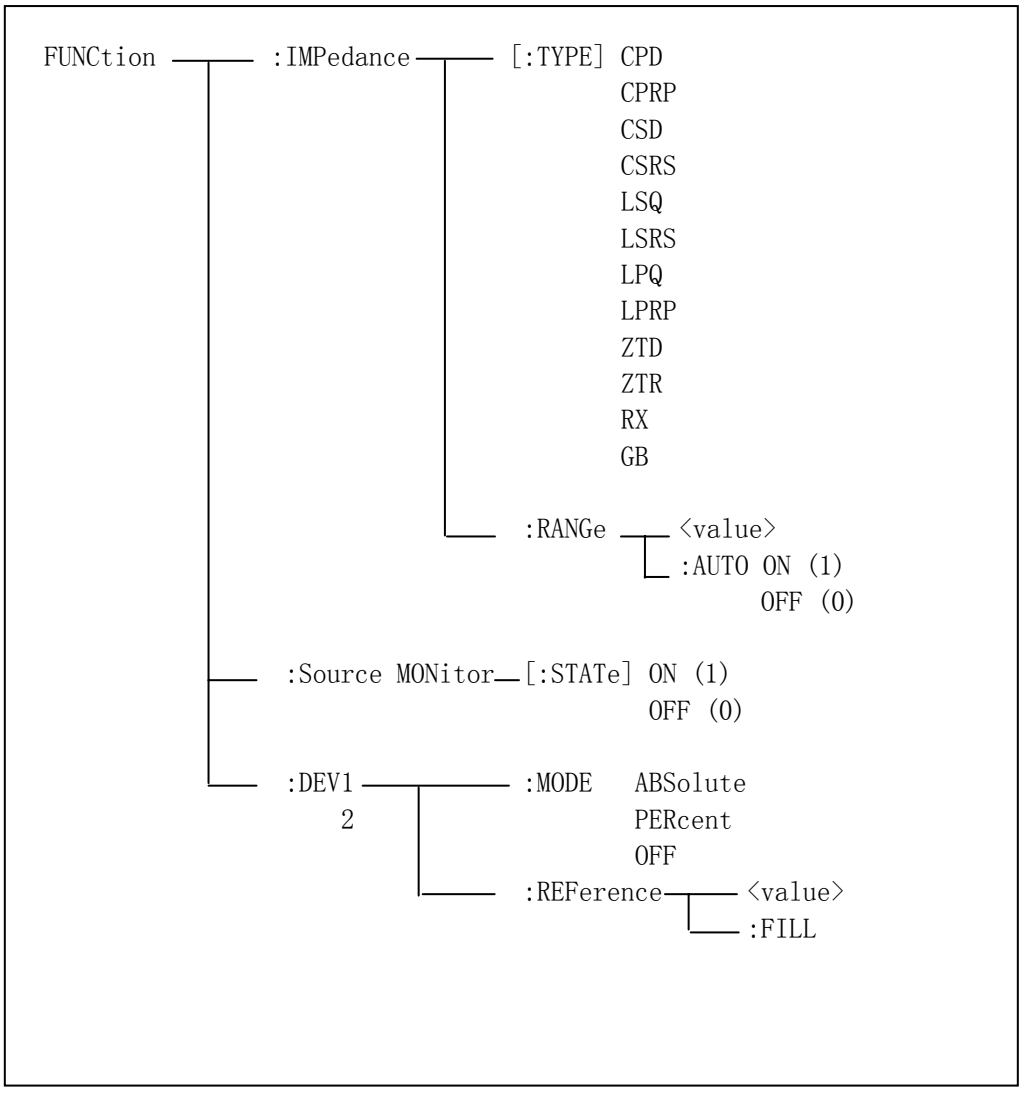

Figure 6-4. FUNCtion Subsystem Command Tree

:IMPedance

The :IMPedance command sets the measurement function. The :IMPedance? query returns the current measurement function.

Command Syntax

FUNCtion:IMPedance <function>

Where, <function> is:

CPD	Sets function to Cp-D	LPQ	Sets function to Lp-Q
CPRP	Sets function to Cp-Rp	LPRP	Sets function to Lp-Rp
CSD	Sets function to Cs-D	ZTD	Sets function to Z-θ (deg)
CSRS	Sets function to Cs-Rs	RX	Sets function to R-X
LSQ	Sets function to Ls-Q	ZTR	Sets function to Z-θ (rad)
LSRS	Sets function to Ls-Rs	GB	Sets function to G-B

Example

WrtCmd("FUNC:IMP RX) Set the measurement function to R-X.

Query Syntax

FUNCtion:IMPedance?

Query Response

Returned format is:

<function><NL^END>

:IMPedance:RANGe

The :IMPedance:RANGe command sets the measurement range. The :IMPedance:RANGe? query returns the current measurement range even if the measurement range is set to AUTO.

Command Syntax

FUNCtion:IMPedance:RANGe <value>

Where, <value> is in the NR1 format with a suffix multiplier and a suffix unit. OHM, and KOHM can be used with this command. The values can be used with this command are listed as follows.

10, 30, 100, 300, 1000, 3000, 10000, 30000, 100000

or 10ohm, 30ohm, 100ohm, 300ohm, 1kohm, 3kohm, 10kohm, 30kohm, 100kohm

If values other than preceding values are used, "Error Parameter" will be displayed in the message window.

Example

WrtCmd("FUNC:IMP:RANG 1KOHM") Set the measurement range to 1Kohm.

If this command is received while auto range is ON, the auto range function is automatically set to OFF and the range will be held at the range dictated by the received command.

Query Syntax

FUNCtion:IMPedance:RANGe?

Query Response

Returned format is:

<value><NL^END>

Where, <value> is 10, 30, 100, 300, 1000, 3000, 10000, 30000, 100000

:IMPedance:RANGe:AUTO

The :IMPedance:RANGe:AUTO command sets the auto range to ON or OFF. The :IMPedance:RANGe:AUTO? query returns the current auto range ON/OFF condition.

Command Syntax

FUNCtion:IMPedance:RANGe:AUTO { ON | OFF | 1 | 0 }

Where,
1 (decimal 49) When the function is ON
0 (decimal 48) When the function is OFF

Example
WrtCmd("FUNC:IMP:RANG:AUTO ON ") Set the measurement range to AUTO.

Query Syntax
FUNCtion:IMPedance:RANGe:AUTO?

Query Response
Returned format is :
<NR1><NL^END>

:Source MONitor

The :Source MONitor command sets the voltage/current level monitor to ON or OFF. The :Source MONitor? query returns the voltage/current level monitor ON/OFF condition.

Command Syntax

FUNCtion:SMONitor[:STATe] { ON | OFF | 1 | 0 }

Where,
1 (decimal 49) When the function is ON
0 (decimal 48) When the function is OFF

Example
WrtCmd("FUNC:SMON ON ") Set the voltage/current level monitor to ON.

Query Syntax
FUNCtion:SMONitor?

Query Response
Returned format is :
<NR1><NL^END>

:DEV<n>:MODE

The :DEV<n>:MODE command sets the deviation measurement mode. The :DEV<n>:MODE? query returns the current setting of the deviation measurement mode.

Command Syntax

FUNCtion:DEC<n>:MODE { ABSolute | PERCent | OFF }

Where,
ABSolute ΔABSolute deviation mode
PERCent Δ% deviation mode
OFF Turn the deviation measurement mode OFF
<n> is:
1 (decimal 49) Deviation mode setting for primary parameter
2 (decimal 50) Deviation mode setting for secondary parameter

Example
WrtCmd("FUNC:DEV1:MODE ABS")
Set ΔABSolute deviation mode for the primary parameter.

Query Syntax
FUNCtion:DEV<n>:MODE?

Query Response
Returned format is :

{ ABS | PER | OFF } <NL^END>

:DEV<n>:REFerence

The :DEV<n>:REFerence command sets the reference value for deviation measurement. The :DEV<n>:REFerence? query returns the current reference values.

Command Syntax
FUNCtion:DEV<n>:REFerence<value>
Where,
<value> is the NR1, NR2, or NR3 format with a suffix multiplier ma, k, m, u, n, p.
<n> is:
1 (decimal 49) Reference value setting for primary parameter
2 (decimal 50) Reference value setting for secondary parameter

Example
WrtCmd("FUNC:DEV1:REF 10")

The <value> may be used without a suffix unit; the unit has been defined by the current measurement function.

Query Syntax
FUNCtion:DEV<n>:REFerence?
Query Response
Returned format is :
<NR3><NL^END>

:REFerence:FILL

The :DEV<n>:REFerence:FILL command executes a single measurement and enters two measured values (the primary and secondary parameters) into each of the reference values for the deviation measurement.

Command Syntax
FUNCtion:DEV<n>:REFerence:FILL
Where, <n> is
1 or 2 (Both reference values are measured simultaneously.)

Example
WrtCmd("FUNC:DEV1:REF:FILL")
The instrument executes a single measurement and enters the measured primary parameter as the primary parameter reference value.

6.5.5 LIST Subsystem

The LIST subsystem command group sets the List Sweep measurement function, including the sweep point settings, the sweep mode and limit values for the limit function. Figure 6-5 shows the command tree of the LIST subsystem command group.

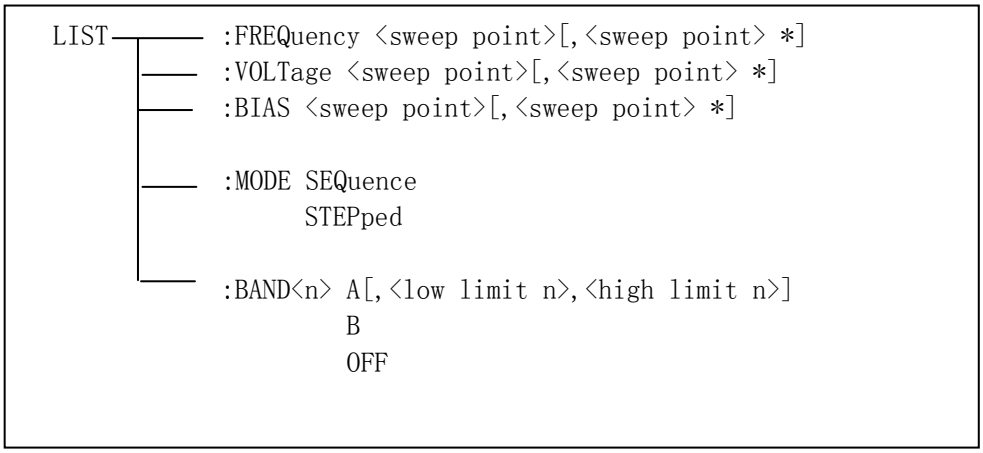

Figure 6-5. LIST Subsystem Command Tree

:FREQuency
The :FREQuency command clears the previous List Sweep point table, and sets the frequency sweep points. The :FREQuency? Query returns the current settings of the frequency sweep points.

Command Syntax
LIST:FREQuency <value> [,<value>*]

*Repeat Max. 4 sweep points
Where,
<value> is the available frequency points, refer to FREQuency Subsystem.

Example
WrtCmd("LIST:FREQ 100,500Hz,1kHz,1000")
Set the first frequency point to 100 Hz
Set the second frequency point to 500 Hz
Set the third frequency point to 1 kHz
Set the forth frequency point to 10 kHz

Query Syntax
LIST:FREQuency?

Query Response
Returned format is :
<NR1>[,<NR1>*]<NL^END>

Note If one of the frequency points is not set, the returned value will be “9.9E37”; If the inputted sweep parameter is not frequency, then “Data corrupt” will be displayed in the message window.

:VOLTage

The :VOLTage command clears the previous list sweep point table, and sets the oscillator voltage level sweep points. The :VOLTage? query returns the current settings of the voltage sweep points.

Command Syntax

LIST:VOLTage <value>[,<value>*]
*Max. 4 sweep points
Where,
<value> is the NR1, NR2, or NR3 format with a suffix multiplier and a suffix unit: mV or V.

Example

WrtCmd(“LIST: VOLT 1.5”)
Set the first voltage level to 1.5 V
WrtCmd(“LIST:VOLT 1E-2, 2E-2, 3E-2, 4E-2”)
Set the first voltage level point to 10 mV
Set the second voltage level point to 20 mV
Set the third voltage level point to 30 mV
Set the forth voltage level point to 40 mV

Query Syntax

LIST:VOLTage?

Query Response

Returned format is:
<NR3>[,<NR3>*]<NL^END>

Note: If one of the voltage level points is not set, the returned value will be “9.9E37”; If the inputted sweep parameter is not voltage level, then “Data corrupt” will be displayed in the message window.

:BIAS

The :BIAS command clears the previous list sweep point table, and sets the DC bias current level sweep points. The :BIAS? query returns the current settings of the DC current sweep points.

Command Syntax

LIST:BIAS <value>[,<value>*]
*Max. 4 sweep points
Where,
<value> is the NR1, NR2, or NR3 format with a suffix multiplier and a suffix unit: uA,mA or A. The maximum DC bias current is 10 A.

Example

WrtCmd(“LIST: BIAS 100MA”)
Set the first DC bias current to 100 mA

WrtCmd(“LIST:BIAS 1E-2, 2E-2, 3E-2, 4E-2”)
Set the first DC bias current point to 10 mA
Set the first DC bias current point to 20 mA
Set the third DC bias current point to 30 mA
Set the forth DC bias current point to 40 mA

Query Syntax
LIST:BIAS?

Query Response
Returned format is:
<NR3>[,<NR3>*]<NL^END>

Note: If one of the DC bias current points is not set, the returned value will be "9.9E37"; If the inputted sweep parameter is not DC bias current, then "Data corrupt" will be displayed in the message window.

Note: TH2816A doesn't provide the internal DC bias current source, an external DC bias current source can be used. (TH1773 can be used as the external DC bias current source which can provide the bias current up to 10 A.)

:MODE

The :MODE command sets the sweep mode of the List Sweep measurement function. The :MODE? query returns the current mode setting of the List Sweep measurement function.

Command Syntax

LIST:MODE { SEQuence | STEPped }

Where,
SEQuence Sets to sequence mode
STEPped Sets to stepped mode

Example
WrtCmd("LIST:MODE SEQ") Set the sweep mode to sequence mode.

Query Syntax
LIST:MODE?

Query Response
Returned format is:

{ SEQ | STEP } <NL^END>

:BAND<n>

The :BAND<n> command sets the limit values of the limit function for the list sweep measurement. The :BAND<n>? query returns the current limit value settings.

Command Syntax
LIST:BAND<n><parameter>[,<low limit n>,<high limit n>]
Where,
<n> 1 to 4 (NR1) : Sweep point number
<parameter> is : A Limit setting enable for primary parameter
B Limit setting enable for secondary parameter
OFF Limit setting disable
<low limit n> NR1, NR2, or NR3 format : low limit for sweep point<n>
<high limit n> NR1, NR2, or NR3 format : high limit for sweep point<n>

Example
WrtCmd("LIST:BAND1 A,10,20")
WrtCmd("LIST:BAND3 OFF")

The current measurement function determined limit unit, so the limit data don't need the suffix unit.
If the measurement results are displayed in the percent deviation mode, then the limits must be inputted using the same percent deviation mode.

Query Syntax
LIST:BAND<n>?

Query Response
Returned format is :
<parameter>,<low limit n>,<high limit n>

Note: If one of the limits is not set, the returned value will be "9.9E37".

6.5.6 APERture Subsystem

The APERture command sets the measurement speed and the averaging rate. The APERture? query returns the current measurement speed and the averaging rate settings.

Command Syntax

APERture { SHORt/FAST | MEDium | LONG/SLOW }[,<value>]

Where,

SHORt/FAST	Fast measurement speed, Short integration time.
MEDium	Medium measurement speed, Medium integration time.
LONG/SLOW	Slow measurement speed, Long integration time.
<value>	1 to 256 (NR1): Averaging rate.

Example
WrtCmd("APER MED,5")

Query Syntax
APERture?

Query Response
Returned format is:

{ FAST | MED | SLOW },<NR1><NL^END>

6.5.7 TRIGger Subsystem

The TRIGger subsystem command group is used to enable a measurement or a sweep measurement, and to set the trigger mode and the trigger delay time. Figure 6-6 shows the command tree of the TRIGger subsystem command group.

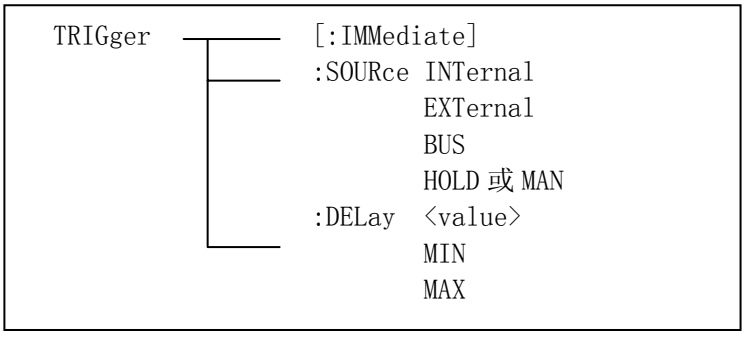

Figure 6-6. TRIGger Subsystem Command Tree

:IMMediate

The :IMMediate command causes the trigger to execute a measurement or a sweep measurement, regardless of the trigger state.

Command Syntax

TRIGger[:IMMediate]

Example

WrtCmd("TRIG")

Note: This command is valid only on ***MeasDisplay***, ***BinNo. Disp***, ***Bin Count*** and ***List Sweep*** page. On other pages this command will be ignored.

:SOURce

The :SOURce command sets the trigger mode. The :SOURce? Query returns the current trigger mode.

Command Syntax

TRIGger:SOURce { INTernal | EXTernal | BUS | HOLD/MAN }

Where,

INTernal	Internal trigger mode
EXTernal	External trigger mode
BUS	Bus trigger mode
HOLD/MAN	Trigger hold (Manual trigger mode)

Example

WrtCmd("TRIG:SOUR BUS") Set bus trigger mode.

Query Syntax

TRIGger:SOURce?

Query Response

Returned format is:

{ INT | EXT | BUS | HOLD } <NL^END>

:DELay

The :DELay command sets the trigger delay time. The :DELay? query returns the current delay time.

Command Syntax

TRIGger:DELay { <value> | MIN | MAX }

Where,

<value>	is the NR1, NR2, or NR3 format with suffix unit m,ms; 0 to 60 [s] in 1 ms resolution
MIN	Sets the minimum delay value (0 s)
MAX	Sets the maximum delay value (60 s)

Example
WrtCmd(“TRIG:DEL 5S”) Set trigger delay time to 5 s
WrtCmd(“TRIG:DEL MIN”) Set trigger delay time to minimum 0s.

Query Syntax
TRIGger:DELay?

Query Response
Returned Format is:
<NR3><NL^END>

6.5.8 FETCh? Subsystem

The FETCh? subsystem command group is a sensor-only command which retrieves the measurement data taken by measurement(s) initiated by a trigger, and places the data into the TH2816A’s output buffer. Figure 6-7 shows the command tree of the FETCh? subsystem command group.

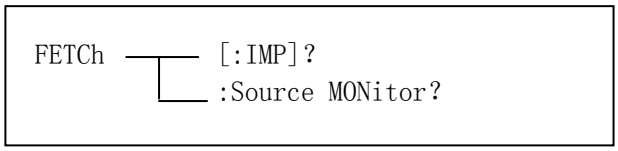

Figure 6-7. FETCh? Subsystem Command Tree

[:IMP]?

The [:IMP]? query sets the latest measurement data of the primary and secondary parameters into the TH2816A's output buffer.

Query Syntax
FETCh[:IMP]?

Example
WrtCmd(“TRIG:SOUR BUS”)
WrtCmd(“TRIG”)
WrtCmd(“FETC?”)

If the latest measurement data has been sent out, the new measurement is not begun or the new measurement is not over, then the FETC? command will be valid after the new measurement is over.
FETC? Command can only be used on ***MeasDisplay***, ***BinNo. Disp***, ***Bin Count*** and ***List Sweep*** page. The query response returned will be “9.9E37,9.9E37” on other pages.
On *List Sweep* page, if the list sweep mode is “STEP” mode, the measurement results for one sweep point will be returned. If the list sweep mode is “SEQ”, the measurement results for all sweep points will be returned. If one list sweep parameter point is not set, the query response will be “9.9E37,9.9E37”.

:Source MONitor?

The :Source MONitor? query sets the latest measured voltage and current monitor data into the TH2816A's output buffer.

Query Syntax
FETCh:SMONitor?

Query Response
Returned format is :
<NR3,NR3><NL^END>.
The latest measured monitor data will always be set in TH2816A's output buffer, even if the monitor data has been read out before.
The command can only be used on the four display pages under DISPLAY menu, and the level monitor must be set to ON, otherwise returned data is "9.9E37,9.9E37".

6.5.9 ABORt Subsystem

TH2816A will halt the current measurement, once ABORt command is received.

Command Syntax
ABORt

Example
WrtCmd("ABOR")

6.5.10 CORRection Subsystem

The CORRection subsystem command group sets the correction function, including the the OPEN/SHORT/LOAD correction settings. Figure 6-8 shows the command tree of the CORRection subsystem command group.

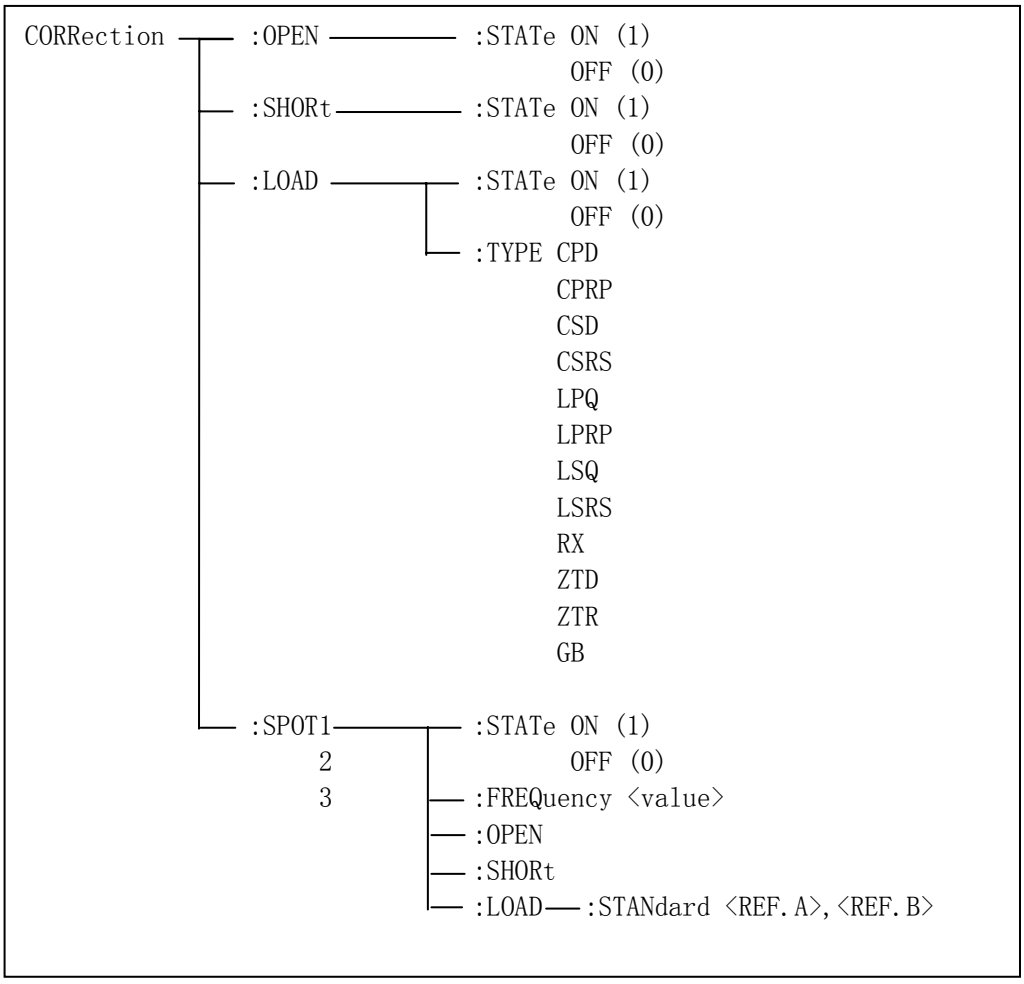

Figure 6-8. CORRection Subsystem Command Tree

:OPEN

The :OPEN command executes 16 presetted OPEN correction data measurement points.

Command Syntax

CORRection:OPEN

Example

WrtCmd("CORR:OPEN")

When a command needs a long time to execute for example the OPEN/SHORT command. The controller should not send the next command before the former command is finished. On GPIB bus, RFD can be used to dominate the BUS before the command is finished. While on RS232C bus, the first character of the command will be ignored by the instrument, if the controller sends the command before the former command is finished.

:OPEN:STATe

The :OPEN:STATe command sets the OPEN correction function to ON or OFF. The :OPEN:STATe? query returns the current ON/OFF condition of the OPEN correction.

Command Syntax

CORRection:OPEN:STATe { ON | OFF | 1 | 0 }

Where,

1 (decimal 49) When the function is ON

0 (decimal 48) When the function is OFF

Example

WrtCmd("CORR:OPEN:STAT ON")

Query Syntax

CORRection:OPEN:STATe?

Query Response

Returned format is :

<NR1><NL^END>

:SHORt

The :SHORt command executes 16 presetted SHORT correction data measurement points.

Command Syntax

CORRection:SHORt

Example

WrtCmd("CORR:SHOR")

:SHORt: STATe

The :SHORt:STATe command sets the SHORT correction function to ON or OFF. The :SHORt:STATe? query responds the current ON/OFF condition of the SHORT correction.

Command Syntax

CORRection:SHORt:STATe { ON | OFF | 1 | 0 }

Where,
1 (decimal 49) When the function is ON
0 (decimal 48) When the function is OFF

Example
WrtCmd("CORR:SHOR:STAT ON")

Query Syntax
CORRection:SHORt:STATe?

Query Response
Returned format is :
<NR1><NL^END>

:LOAD:STATe

The :LOAD:STATe command sets the LOAD correction function to ON or OFF. The :LOAD:STATe? query responds the current ON/OFF condition of the LOAD correction.

Command Syntax

CORRection:LOAD:STATe { ON | OFF | 1 | 0 }

Where,
1 (decimal 49) When the function is ON
0 (decimal 48) When the function is OFF

Example
WrtCmd("CORR:LOAD:STAT ON")

Query Syntax
CORRection:LOAD:STATe?

Query Response
Returned format is :
<NR1><NL^END>

:LOAD:TYPE

The :LOAD:TYPE command sets the function of the reference values for the load correction. The :LOAD:TYPE? query responds the current function of the reference values.

Command Syntax
CORRection:LOAD:TYPE <function>
Where, <function> is:

CPD	Sets function to Cp-D	LPQ	Sets function to Lp-Q
CPRP	Sets function to Cp-Rp	LPRP	Sets function to Lp-Rp
CSD	Sets function to Cs-D	ZTD	Sets function to Z-θ (deg)

CSRS	Sets function to Cs-Rs	RX	Sets function to R-X
LSQ	Sets function to Ls-Q	ZTR	Sets function to Z-θ (rad)
LSRS	Sets function to Ls-Rs	GB	Sets function to G-B

Example
WrtCmd("CORR:LOAD:TYPE CPD")

Query Syntax
CORRection:LOAD:TYPE?

Query Response
Returned format is:
<function><NL^END>

:SPOT<n>:STATe

The :SPOT<n>:STATe command sets the specied frequency point correction (FREQ1, FREQ2 or FREQ3) to ON or OFF. The :SPOT<n>:STATe? query responds the current ON/OFF setting of the specified frequency point correction.

Command Syntax

CORRection:SPOT<n>:STATe { ON | OFF | 1 | 0 }

Where,
1 (decimal 49) When the function is ON
0 (decimal 48) When the function is OFF
<n> is:
1 State setting for FREQ1 point
2 State setting for FREQ2 point
3 State setting for FREQ3 point

Example
WrtCmd("CORR:SPOT1:STAT ON")

Query Syntax
CORRection:SPOT<n>:STATe?

Query Response
Returned format is:
<NR1><NL^END>

:SPOT<n>:FREQuency

The :SPOT<n>:FREQuency command sets the frequency points (FREQ1, FREQ2 or FREQ3) for the specified frequency point correction. The :SPOT<n>:FREQuency? query returns the current settings of the frequency points (FREQ1, FREQ2 or FREQ3).

Command Syntax
CORRection:SPOT<n>:FREQuency <value>
Where,
<value> is the frequency parameter described in FREQ subsystem command.
<n> is:
1 Frequency setting for FREQ1 point
2 Frequency setting for FREQ2 point
3 Frequency setting for FREQ3 point

Example
WrtCmd("CORR:SPOT1:FREQ 2KHZ") Set correction FREQ 1 to 2 kHz.

Query Syntax
CORRection:SPOT<n>:FREQuency?

Query Response
Returned format is:
<frequency><NL^END>
<frequency> is listed as follows

50.0 Hz	60.0 Hz	100 Hz	120 Hz
200 Hz	400 Hz	500 Hz	1.0 kHz
2.0 kHz	4.0 kHz	5.0 kHz	10 kHz
20 kHz	40 kHz	50 kHz	100 kHz

If the correction frequency point is set to OFF, "OFF" will be returned.

:SPOT<n>:OPEN

The :SPOT<n>:OPEN command executes the OPEN correction data measurement for the specified frequency point (FREQ1, FREQ2 or FREQ3) correction.

Command Syntax
CORRection:SPOT<n>:OPEN
Where,
<n> is:
1 State setting for FREQ1 point
2 State setting for FREQ2 point
3 State setting for FREQ3 point

Example
WrtCmd("CORR:SPOT1:OPEN") Execute the OPEN correction for FREQ1.

:SPOT<n>:SHORt

The :SPOT<n>:SHORt command executes the SHORT correction data measurement for the specified frequency point (FREQ1, FREQ2 or FREQ3) correction.

Command Syntax
CORRection:SPOT<n>:SHORt

Where, <n> is:
1 State setting for FREQ1 point
2 State setting for FREQ2 point
3 State setting for FREQ3 point

Example
WrtCmd("CORR:SPOT1:SHOR") Execute the SHORT correction for FREQ1.

:SPOT<n>:LOAD

The :SPOT<n>:LOAD command executes the LOAD correction data measurement for the specified frequency point (FREQ1, FREQ2 or FREQ3) correction.

Command Syntax
CORRection:SPOT<n>:LOAD

Where,
<n> is:
1 State setting for FREQ1 point
2 State setting for FREQ2 point
3 State setting for FREQ3 point

Example
WrtCmd("CORR:SPOT1:LOAD")
Execute the LOAD correction for FREQ1 and calculate the LOAD correction factor.

:SPOT<n>:LOAD:STANdard

The :SPOT<n>:LOAD:STANdard command sets the reference values of the standard at the specified frequency point (FREQ1, FREQ2, or FREQ3). The :SPOT<n>:LOAD:STANdard? query returns the current settings of the reference values for FREQ1, FREQ2 or FREQ3.

Command Syntax
CORRection:SPOT<n>:LOAD:STANdard <REF.A>,<REF.B>
Where,
<n>
1 Setting for FREQ1 point
2 Setting for FREQ2 point
3 Setting for FREQ3 point
<REF.A> is the NR1, NR2, or NR3 format with suffix ma, k, m, u, n, p.
<REF.B> is the NR1, NR2, or NR3 format with suffix ma, k, m, u, n, p.

Example
WrtCmd("CORR:SPOT1:LOAD:STAN 100.7,0.0002")

Query Syntax
CORRection:SPOT<n>:LOAD:STANdard?

Query Response
Returned format is :
<NR3>,<NR3><NL^END>

6.5.11 COMParator Subsystem

The COMParator subsystem command group sets the comparator function, including its ON/OFF setting, limit mode, and limit values. Figure 6-9 shows the command tree of the COMParator subsystem command group.

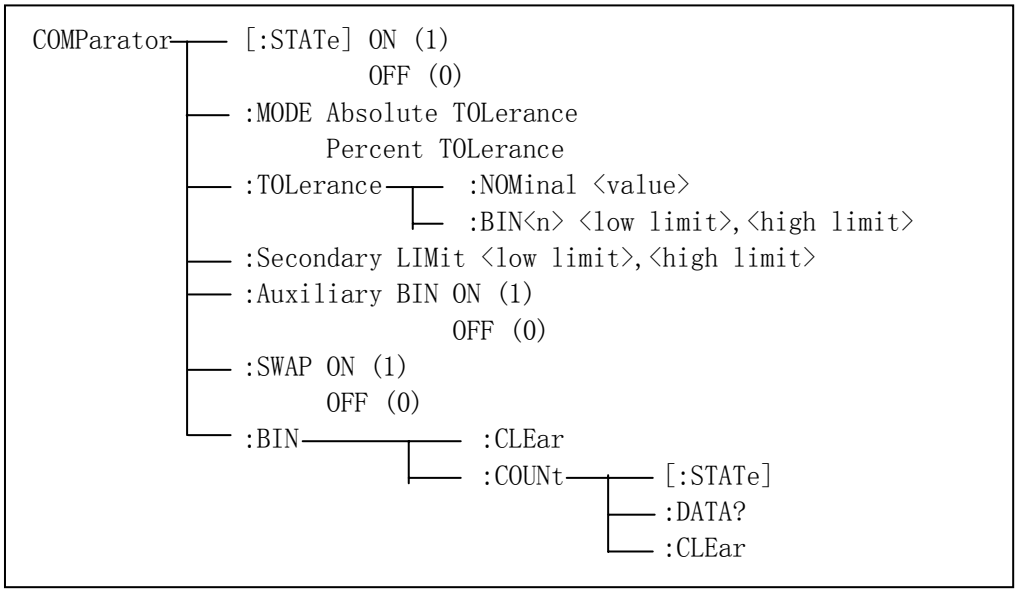

Figure 6-9. COMParator Subsystem Command Tree

[:STATe]

The [:STATe] command sets the comparator function to ON or OFF. The [:STATe]? query responds the current ON/OFF condition of comparator function.

Command Syntax

COMParator[:STATe] { ON | OFF | 1 | 0 }

Where,

1 (decimal 49) When the function is ON

0 (decimal 48) When the function is OFF

Example

WrtCmd("COMP ON")

Query Syntax

COMParator[:STATe]?

Query Response

Returned format is :

<NR1><NL^END>

:MODE

The :MODE command sets the limit mode of the comparator function. The :MODE? query returns the current settings of the limit mode.

Command Syntax

COMParator:MODE { ATOLerance | PTOLerance }

Where,

ATOLerance Set the absolute tolerance mode (parameter value)

PTOLerance Set the percent tolerance mode (the ratio in percent)

Example

WrtCmd("COMP:MODE ATOL")

Query Syntax

COMParator:MODE?

Query Response

Returned format is:

{ ATOL | PTOL } <NL^END>

:TOLerance:NOMinal

The :TOLerance:NOMinal command sets the nominal value for the tolerance mode of the comparator function. This can be set only when the limit mode is set to the tolerance mode. The :TOLerance:NOMinal? query returns the current settings of the nominal value for the tolerance mode.

Command Syntax
COMParator:TOLerance:NOMinal <value>

Where,
<value> is the NR1, NR2, or NR3 format with suffix ma, k, m, u, m, p.

Example
WrtCmd("COMP:TOL:NOM 100E-12")

Query Syntax
COMParator:TOLerance:NOMinal?

Query Response
Returned Format is:
<NR3><NL^END>

:TOLerance:BIN<n>

The :TOLerance:BIN<n> command sets the low/high limit values of each BIN for the comparator function tolerance mode. These limits can be set only when the limit mode is set to the tolerance mode. The :TOLerance:BIN<n>? query returns the current settings of the low/high limit values of each of the BINs.

Command Syntax
COMParator:TOLerance:BIN<n> <low limit>,<high limit>

Where,
<n> 1 to 4 (NR1) : BIN number
<low limit> NR1, NR2, or NR3 format with suffix ma, k, m, u, n, p.
<high limit> NR1, NR2, or NR3 format with suffix ma, k, m, u, n, p.

Note The low limit value should be lower than the high limit value. If the low limit value is set higher than the high limit, a warning message is displayed when this command is received (an error does not occur).

Example
WrtCmd("COMP:TOL:BIN1 -5,5")
WrtCmd("COMP:TOL:BIN2 -10,10")

Query Syntax
COMParator:TOLerance:BIN<n>?

Query Resopnse
Returned Format is:
<low limit>,<high limit><NL^END>

Low limit and high limit are NR3 format. If the current limits are not set, "9.9E37, 9.9E37" will be returned.

:Secondary LIMit

The :Secondary LIMit command sets the low/high limit values for the comparator function secondary parameter. The :Secondary LIMit? query returns the current settings of the secondary parameter low/high limit values.

Command Syntax
COMParator:SLIMit <low limit>,<high limit>

Where,
<low limit> is the NR1, NR2, or NR3 format with suffix ma, k, m, u, n, p.
<high limit> is the NR1, NR2, or NR3 format with suffix ma, k, m, u, n, p.

Note: The low limit value should be lower than the high limit value. If the low limit value is set higher than the high limit, a warning message is displayed when this command is received (an error does not occur).

Example
WrtCmd("COMP:SLIM 0.001,0.002")

Query Syntax
COMParator:SLIMit?
Query Response
Returned Format is:
<NR3>,<NR3><NL^END>

If the current secondary limits are not set, "9.9E37" will be returned.

:Auxiliary BIN

The :Auxiliary BIN command sets the auxiliary BIN of the comparator to ON or OFF. The :Auxiliary BIN? query responds the current ON/OFF condition of the auxiliary BIN.

Command Syntax

COMParator:Auxiliary BIN { ON | OFF | 1 | 0 }

Where,
0 (decimal 48) When the function is OFF
1 (decimal 49) When he function is ON

Example
WrtCmd("COMP:ABIN ON")

Query Syntax
COMParator:Auxiliary BIN?

Query Response
Returned Format is:
<NR1><NL^END>

:SWAP

The :SWAP command sets the swap parameter function to ON (3 BIN settings for secondary parameter) or OFF (3 BIN settings for primary parameter). The :SWAP? query responds the current ON/OFF condition of the swap parameter function.

Command Syntax

COMParator:SWAP { ON | OFF | 1 | 0 }

Where,
0 (decimal 48) When the function is OFF
1 (decimal 49) When the function is ON

Example
WrtCmd(“COMP:SWAP ON”)

Query Syntax
COMParator:SWAP?

Query Response
Returned Format is:
<NR1><NL^END>

:BIN:CLEar

The :BIN:CLEar command clears all of the limit value settings.

Command Syntax
COMParator:BIN:CLEar

Example
WrtCmd(“COMP:BIN:CLE”)

:BIN:COUNt[:STATe]

The :BIN:COUNt[:STATe] command sets the BIN count function to ON or OFF. The :BIN:COUNt[:STATe]? query responds with the current ON/OFF condition of the BIN count function.

Command Syntax

COMParator:BIN:COUNt[:STATe] { ON | OFF | 1 | 0 }

Where,
0 (decimal 48) When the function is OFF
1 (decimal 49) When the function is ON

Example
WrtCmd(“COMP:BIN:COUN ON”)

Query Syntax
COMParator:BIN:COUNt[:STATe]?

Query Response
Returned Format is:
<NR1><NL^END>

:BIN:COUNt:DATA?

The :BIN:COUNt:DATA? query returns the comparator BIN count results.

Query Syntax
COMParator:BIN:COUNt:DATA?

Query Response
Returned Format is:
<BIN1 count>,<BIN2 count>, <BIN3 count>,<OUT OF BIN count>, <AUX BIN count><NL^END>

Where,
<BIN1-3 count> NR1 format : count result of BIN1-9
<OUT OF BINS count> NR1 format : count result of OUT OF BINS
<AUX BIN count> NR1 format : count result of AUX BIN

:BIN:COUNt:CLEar
The :BIN:COUNt:CLEar command clears all BIN counts.

Command Syntax
COMParator:BIN:COUNt:CLEar

Example
WrtCmd("COMP:BIN:COUN:CLE")

6.5.12 Mass MEMory Subsystem

The Mass MEMory subsystem command group loads or stores setting data from/to the internal EEPROM.Figure 6-10 shows the command tree of the Mass MEMory subsystem command group.

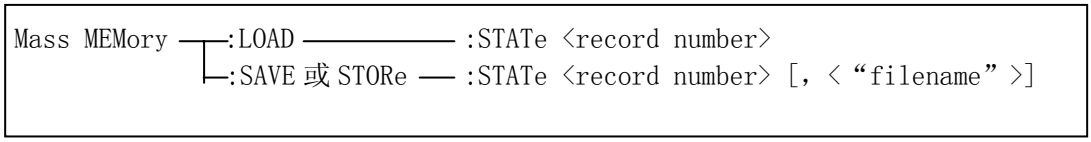

Figure 6-10. Mass MEMory Subsystem Command Tree

:LOAD:STATe
The :LOAD:STATe command loads the setting data from the internal EEPROM.

Command Syntax
MMEMory:LOAD:STATe <value>
Where,
<value> 0 to 11 (NR1) : file number for internal EEPROM

Example
WrtCmd("MMEM:LOAD:STAT 1)

If the file number is not available, the message "Record Not Exist" will be displayed in the message window.
The file contains the page information. When a file is loaded, the instrument will display the saved page.

:STORe:STATe/ :SAVE:STATe
The :STORe:STATe or :SAVE:STATe command stores the setting data to the internal EEPROM.

Command Syntax
MMEMory:STORe:STATe <value>[,<"filename">]

Where,
<value> 0 to 11 (NR1) : record number for EEPROM

<”filename”> The file name consists of not more than 18 characters. <Unnamed> will be the default name, if you don’t input a file name.

Example
WrtCmd(“MMEM:STOR:STAT 1,”#TH2816A*””)

6.5.13 Common Commands

A common command consists of an asterisk (*) and a header. TH2816A acceptable GPIB common commands are described as follows.

***RST**

The *RST command (reset command) sets the TH2816A to its initial settings.

Command Syntax
*RST

Example
WrtCmd(“*RST”)

***TRG**

The *TRG command (trigger command) triggers a measurement. This command also moves the primary and secondary parameter measurement data into the TH2816A's output buffer.

Command Syntax
*TRG
This command will be ignored on no measurement pages, and “9.9E37,9.9E37” will be returned
.

Example
WrtCmd(“*TRG”)

***IDN?**

The *IDN? query returns the TH2816A ID.

Query Syntax
*IDN?

Query Response
Returned format is:
<product>,<version>,<NL^END>
Where,
<product> TH2816A Precision LCR Meter
<version> software revision number

6.5.14 Error and Warning Messages

The bus commands maybe contain error commands, command syntax errors or error parameters. TH2816A executes a command after the command is checked. If one of these errors occurs, TH2816A halts the command analysis, and the rest commands are ignored.

The error messages listed as follows are displayed in the message window.

Error Message	Description
Unknow Message!	Unrecognized command is received.
Syntax Error!	Unrecognized command or data type is received. The message unit separator (for example , “;” ,” ,”) is improper.
Data Error!	Improper data type used. Data value was too large. Data value is not allowed.
Error Parameter.	Unrecognized parameter used.
Error Suffix.	Units are unrecognized, or the units are not appropriate. A suffix is not allowed for this operation.
Data Too Long!	Program Data is too long.
Cannot Executed!	Improper command. For example, frequency set command is sent when frequency list sweep measurement is performed.
Record Not Exist!	Load a file that is not exist.

The note messages listed as follows are displayed in the message window when some commands are executing.

Note message	Description
Open Progress..	Open correction is in progress.
Short Progress..	Short correction is in progress.
Save Progress..	Save control settings is in progress
Query Updated!	A new query received when the output buffer is not empty.
Data Print Fail!	Data output operation is over time in talk only mode.
Data Corrupt	“Data Corrupt” is sent to the bus as a query response, and the message is not displayed on the LCD.

Chapter 7 Handler Interface

7.1 Basic Information

The handler interface outputs signals to indicate measurement completed, bin sorting judgments of the comparator function, and Go/No-Go judgments of the list sweep comparator function. The handler interface also has an input for an external trigger signal. Using these signals, TH2816A can easily be combined with a component handler and a system controller to fully automate component testing, sorting, and quality control data processing to increase production efficiency. Table 7-1 lists the handler interface specifications.

Table 7-1 Specifications of Handler Interface.

Output signal (Negative true, open collector, opto-isolated)	Decision output for comparator function	Bin number, out of bins, and rejection status
	Decision output for list sweep comparator function	IN/OUT at each sweep point and pass/fail for the result of sequential comparisons
	IDX	Analog measurement complete
	EOM	Full measurement complete. Display time is not included on the ***BinNo Disp*** page. Display time is included on the ***List Sweep*** page.
Input Signal (Opto-isolated)	TRIG	External Trigger, Pulse width≥1μs

7.2 Handler Interface Operation

This paragraph provides information, including a description of the interface signal lines and their electrical characteristics, necessary to use the Handler Interface.

7.2.1 Signal line definition

The handler interface uses three types of signals, comparison output, control input and control output. The signal lines for the Comparator Function and the List Sweep Comparator Function are defined differently for comparison output and control output signals. The following defines the signals when the handler interface Comparator Function and the List Sweep Comparator Function are used.

7.2.1.1 Signal Line Used for Comparator Function

The signal definitions used for the Comparator Function are as follows.

- Comparison Output Signals:
  /BIN1 - /BIN3
  /AUX
  /OUT
  /PHI primary parameter high reject signal
  /PLO primary parameter low reject signal
  /SREJ secondary parameter reject signal
- Control Output Signals:
  /IDX analog measurement completed signal
  /EOM end of measurement and comparison data valid signal

- Control Input Signal:
  /TRIG external trigger signal

The contact assignments and a brief description of each signal used for the comparator function are given in Table 7-2 and Figure 7-2. The timing diagram is shown in Figure 7-3.
The /(back slash) in the signal name means that the signal is asserted when low.

Table 7-2. Pin Assignments For Comparator Function

Pin No.	Signal Name	Description
1 2 3 4 5 6 7 8 9	/BIN1 /BIN2 /BIN3 /BIN4 /BIN5 /BIN6 /BIN7 /BIN8 /BIN9	Bin sorting judgments. All bin sorting signal outputs are opto-isolated open collector.
10 11	/OUT /AUX	Bin sorting judgments. All bin sorting signal outputs are opto-isolated open collector.
12 13	/TRIG /TRIG	External Trigger: TH2816A is triggered on the rising edge of a pulse applied to this pin when the trigger mode is set to EXT mode.
14 15	EXV2 EXV2	External DC voltage 2: DC voltage supply pins for DC isolated control signals (/TRIG, /IDX, /EOM). Setting of internal jumpers must be changed when using an internal voltage supply.
16 17 18	VCC	Internal voltage supply (maximum 100 mA) Setting of internal jumpers must be changed when using an internal voltage supply.
19	/PHI	Primary Parameter High Reject: The measurement value is greater than the high limit value of BIN1–BIN3. (See Figure 7-1)
20	/PLO	Primary Parameter Low Reject: The measurement value is less than the low limit value of BIN1-BIN3. (See Figure 7-1)
21	/SREJ	Secondary Parameter Reject: The measurement value is not within the range of the secondary parameter limit. (See Figure 7-1)
22 23 24 25 26	NC NC NC NC NC	No Connection No Connection No Connection No Connection No Connection
27 28	EXTV1 EXTV1	External DC voltage 1: DC voltage supply pins for DC isolated open collector outputs, /BIN1-/BIN3, /AUX, /OUT, /PHI, /PLO, /SREJ. The setting of internal jumpers must be changed when using the internal voltage supply.
29	NC	No Connection
30	/IDX	/IDX signal is asserted when an analog measurement is completed and TH2816A is ready for the next DUT to be connected to the UNKNOWN terminals. The measurement data, however, is not valid until /EOM is asserted. (See Figure 7-3)
31	/EOM	End of Measurement: This signal is asserted when the measurement data and comparison results are valid. (See Figure 7-3)
32 33	COM2 COM2	Common for EXTV2
34 35 36	COM1 COM1 COM1	Common for EXTV1

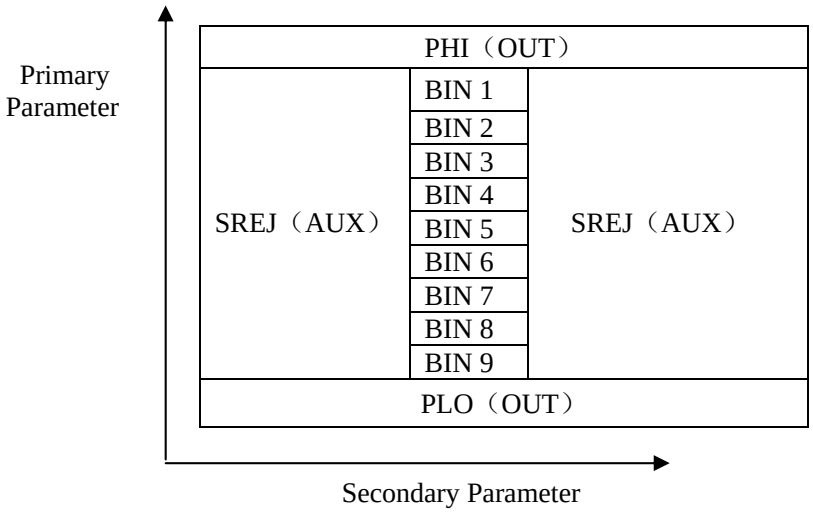

Figure 7-1. /PHI, /PLO, /SREJ Signal's Area Example

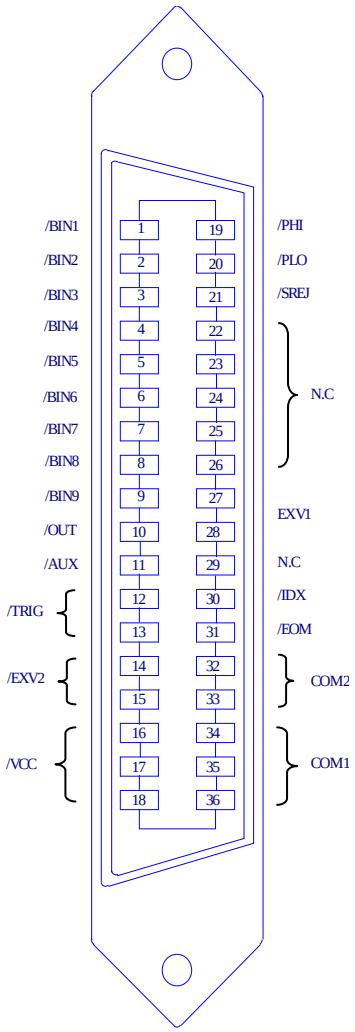

Figure 7-2 Pin Assignment For Handler Interface Connector

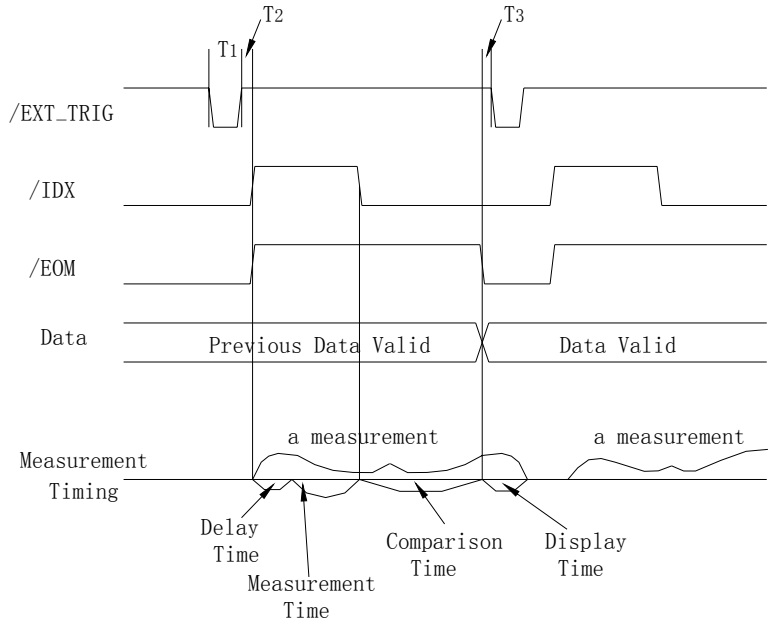

Time	Minimum Value	Maximum Value
T_1 Trigger Pulse Width	1 μs	---
T_2 Measurement Start Delay Time	200 μs	Display Time +200μs
T_3 Trigger Wait Time After /EOM Output	0 μs	---

1 Typical calculation and comparison time is 2ms;

2 Typical display time for each display format is as follows.

MeasDisplay page:

Large Character Display : approx. 50ms
Normal Character Display : approx. 3ms
Vm/Im Monitor ON : Plus 2ms

BinNo. Disp page approx. 8ms
Bin Count page approx. 5ms

Figure 7-3 Timing Diagram

7.2.1.2 Signal Line Used for List Sweep Comparator Function

Signal definition used for the list sweep comparator function is different from that used for the comparator function. Signal definition used for the list sweep comparator function is as follows.

- Comparison Output Signals:
  /BIN1-BIN3 and /OUT indicate IN/OUT judgments for each sweep point (refer to Figure 7-4). /AUX indicates pass/fail judgment (one or more failed judgments of steps 1 to 4 occurred during a single sweep).
  These signals are output when the sweep measurement is completed.
- Control Output Signals:
  /IDX (analog measurement completed signal) and /EOM (end of measurement signal). The timing when /IDX and /EOM are asserted is as follows: (different from that used for the comparator function).

  In the SEQ sweep mode:
  /IDX is asserted when the last step of an analog measurement of a sweep

measurement is completed. /EOM is asserted when all of the comparison results are valid after a sweep measurement.

In the STEP sweep mode:
/IDX is asserted after each step of analog measurement in a seep measurement is completed. /EOM is asserted after each step measurement, inclding comparison time, is completed.

The contact assignments and a brief description of signals used for the list sweep function are given in Table 7-3 and Figure 7-2 (pin assignments for the list sweep comparator function are the same as for the comparator function). The timing diagram is shown in Figure 7-5.
The /(back slash) in the signal name means that the signal is asserted when LOW.

Table 7-3 Contact Assignments for List Sweep Comparator Function

Pin No.	Signal Name	Description
1	/BIN1	Failed (out of limit) at sweep Point 1
2	/BIN2	Failed (out of limit) at sweep Point 2
3	/BIN3	Failed (out of limit) at sweep Point 3
4	/BIN4	Not Used
5	/BIN5	Not Used
6	/BIN6	Not Used
7	/BIN7	Not Used
8	/BIN8	Not Used
9	/BIN9	Not Used
10	/OUT	Failed (out of limit) at sweep Point 4
11	/AUX	/AUX is asserted when one or more file judgments of Steps 1 to 10 occur in a single sweep.
12-18		Same as the assignments for the comparator function (Refer to Table 7-2).
19-21	N.U	Not Used (Off state, HIGH level)
22-29		Same as the assignments for the comparator function (Refer to Table 7-2).
30	/IDX	In the SEQ sweep mode: /IDX is asserted when an analog measurement of the last sweep step is completed, and TH2816A is ready for the next DUT to be connected to the UNKNOWN terminals. The measurement data, however, is not valid until/EOM is asserted. (See Figure 7-5) In the STEP sweep mode: /IDX is asserted when each analog measurement is complete and TH2816A is ready for the next sweep step. The measurement data, however, is not valid until /EOM is asserted (See Figure 7-5).
31	/EOM	End of Measurement In the SET sweep mode : /EOM is asserted when the measurement data and comparison results are valid after the last step measurement is completed. (See Figure 7-5.) In the STEP sweep mode: /EOM is asserted when each step measurement, including the comparison times, is completed and the measurement data is valid. The comparison results are valid after the /EOM signal of the last sweep point is asserted. (See figure 7-5)
32-36		Same as the assignments for the comparator function (Refer to Table 7-2).

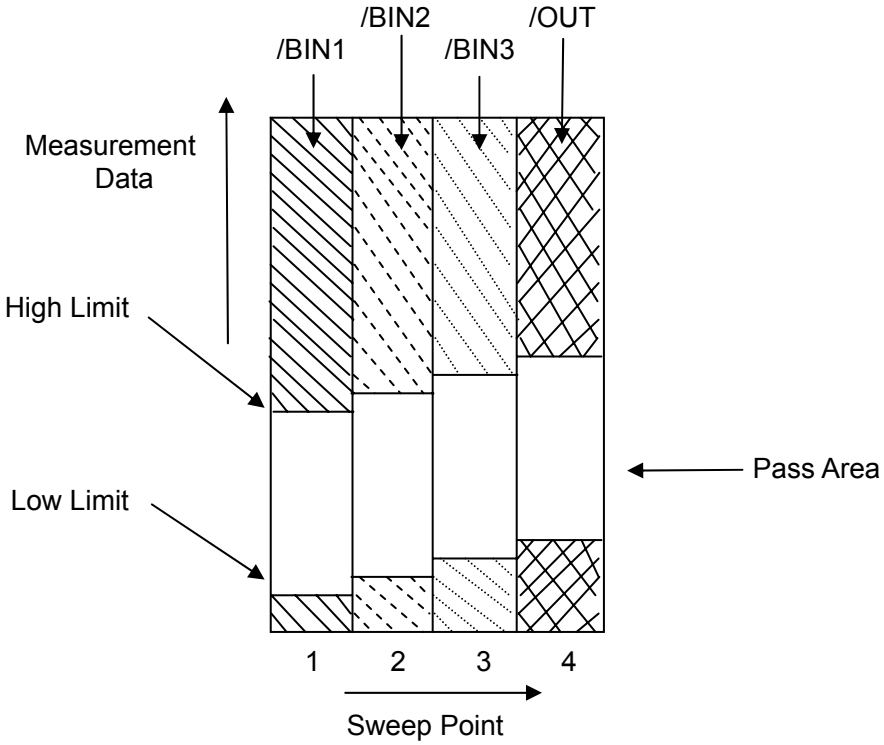

Figure 7-4 Signal Area Example
(For The List Sweep Comparator Function)

SEQ Sweep Mode:

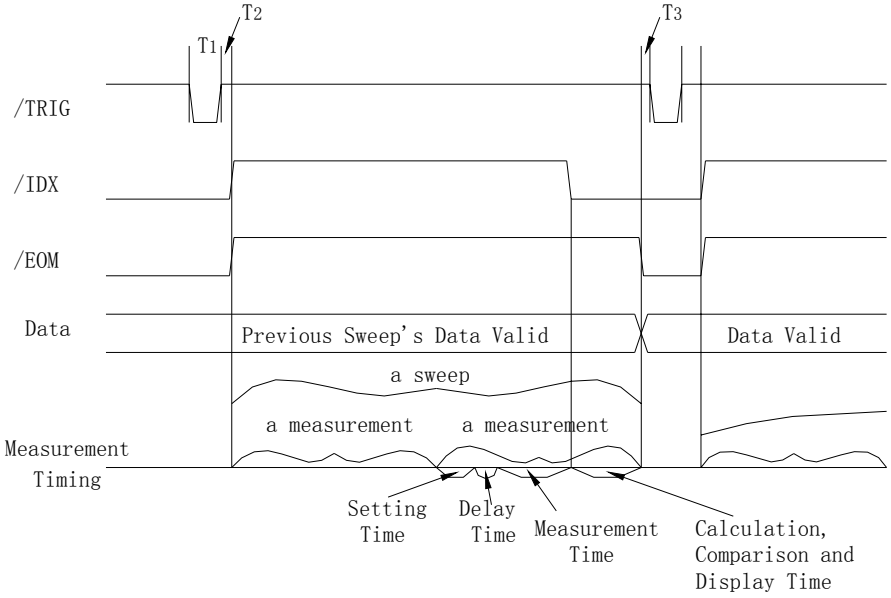

STEP Sweep Mode:

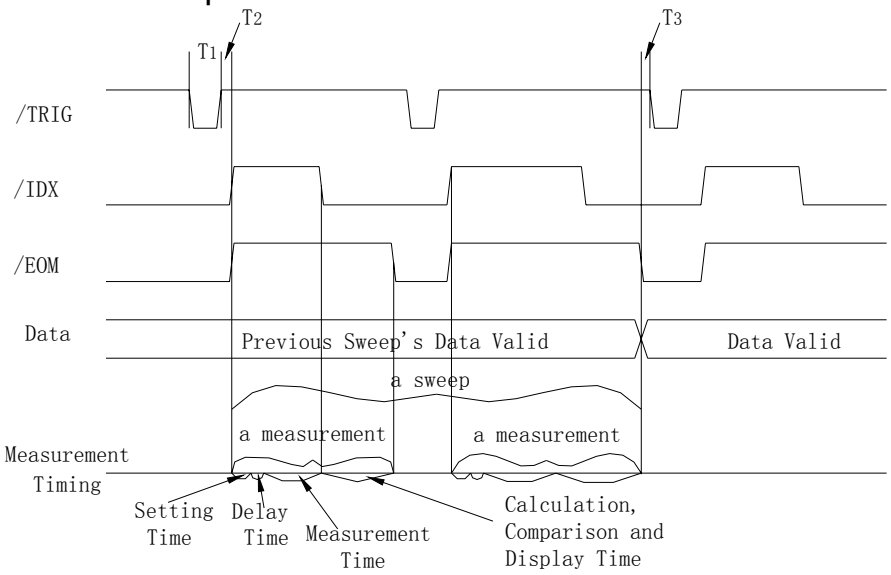

NOTE

1. Setting Time includes Correction Data Switching Time.
2. Calculation, Comparison and Display Time is approx. 5ms. Refer to Figure 7-3 for information of T1, T2, T3.

Figure 7-5 Timing Diagram for List Sweep Comparator Function

7.3 Electrical Characteristics

As mentioned in the previous paragraph, the meaning of some of the signals is different for the comparator function and the list sweep comparator function. However, the electrical characteristics of these signals are identical for the two operations. The following descriptions apply to both the comparator function and the list sweep comparator function.

7.3.1 DC Isolated Outputs

Each DC output (pins 1 through 11, pins 19 through 21, pins 30 through 31) is isolated using an open collector output opto-coupler. The output voltage of each line is set by a pull-up resistor on the handler interface board. The pull-up resistors can be connected to the internally supplied voltage (+5V), or to an externally applied voltage (EXTV: +5V to +24V) by setting jumpers.
The electrical characteristics of the DC isolated outputs are divided into two types. (See Table 7-4)

Since the power source for the Comparison Output and Control Output signals are different, two circuit commons (COM1, COM2) are made available.

Table 7-4 DC Isolated Output Electrical Characteristics

Output Signals	Voltage Output Rating		Maximum Current	Circuit Common
	Low	High		
Comparison Signals /BIN1 - /BIN3 /OUT /AUX /PHI /PLO /SREJ	≤0.5V	+5V to +24V	6mA	Internal pull-up voltage: TH2816A circuit common (GND) External voltage (EXTV1): COM1
Control Signals /IDX /EOM	≤0.5V	+5V to +24V	6mA	Internal pull-up voltage: TH2816A circuit common (GND) External voltage (EXTV2): COM2

A simplified diagram of the output signals in shown in Figure 7-6 (Comparison Signals) and Figure 7-7 (Control Signals).

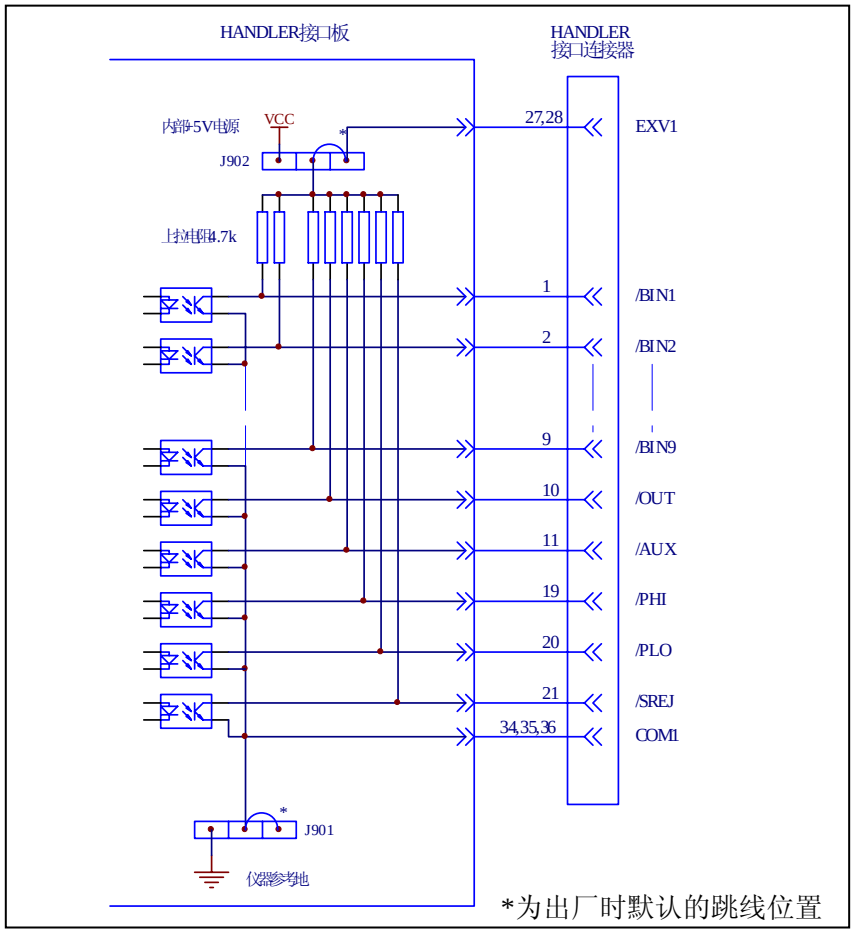

Figure 7-6 Simplified Diagram of The Comparison Output Signals

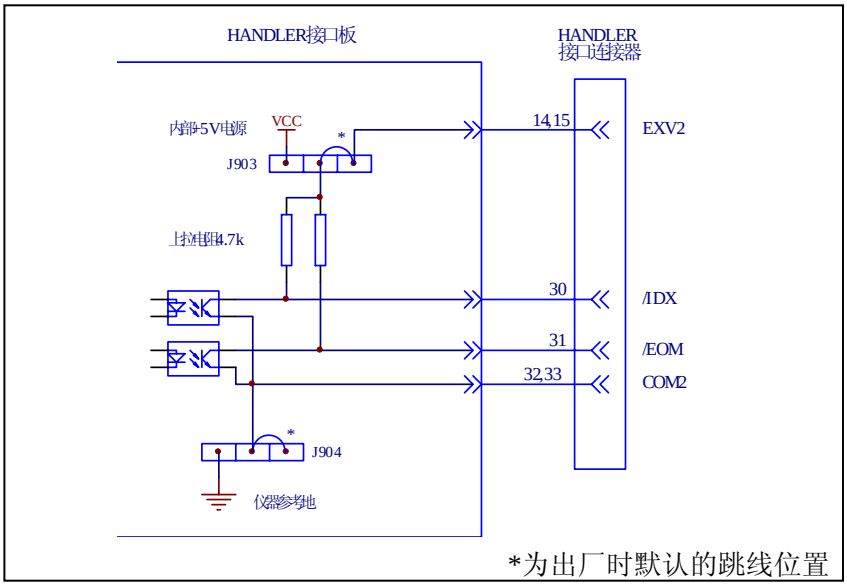

Figure 7-7 Simplified Diagram of The Control Output Signals

7.3.2 DC Isolated Input

The /TRIG signal (pin 12 and 13) is connected to the cathode of the LED in an opto-coupler. TH2816A is triggered on the rising edge of the /TRIG pulse. The anode of the LED can be powered from the internal 5 V, or by an external voltage source EXTV2.

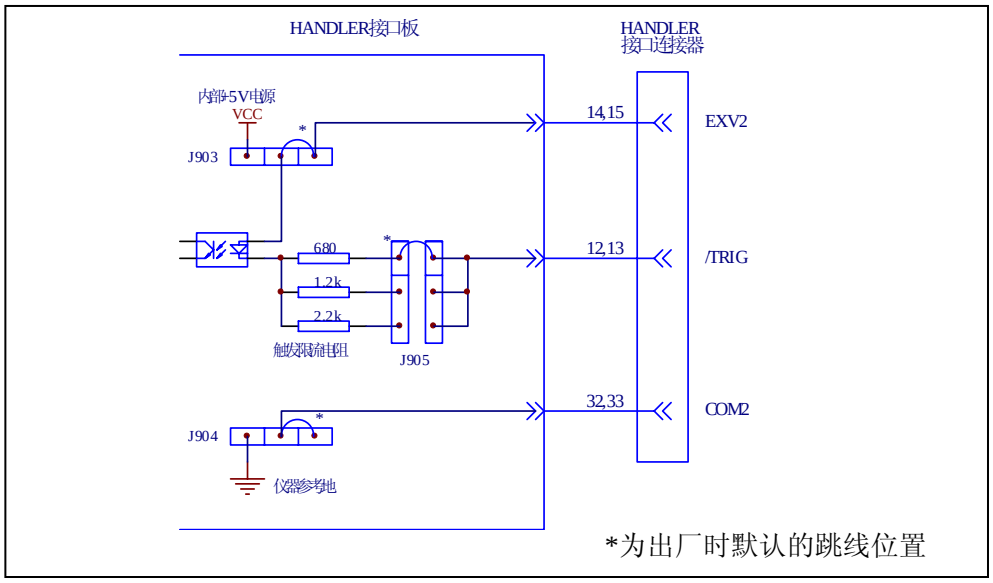

Figure 7-8 Handler Interface Input Signal Diagram

To limit the trigger current, jumper J905 must be selected considering the optocoupler anode voltage being used.

7.4 Setting Up the Handler Interface Board

Jumpers on the Handler Interface board must be set to select the signal outputs (Open collector, internal voltage outputs, or External voltage outputs). A description of each jumper is given in Table 7-5, and their locations are shown in Figure 7-9.

When shipped from the factory, each jumper is set to the (N) position (marked “N” on the handler interface board).

Jumper J901 and J902 are used to select the internal voltage or external voltage for the output signals.
Jumper J903 and J904 are used to select the internal voltage or external voltage for the control signals.
Jumper J905 is used to select the current limiting resistor under different voltage range.

Jumper		Description	Signals
No.	Position		
J901	Left	DC isolated outputs are not isolated. COM1 is connected to TH2816A circuit common.	/BIN1-/BIN3 /AUX /OUT /PHI /PLO /SREJ
	Right(N)	DC isolated outputs are isolated.	
J902	Left	The open collector outputs are pulled up to the internal VCC (+5 V).	
	Right(N)	The open collector outputs are pulled up to the external EXV1(+5V to +24V)。	
J903	Left	The open collector outputs are pulled up to the internal VCC (+5V).	/IDX /EOM /TRIG
	Right(N)	The open collector outputs are pulled up to the external EXV2 (+5V to +24V).	
J904	Left	DC isolated outputs are not isolated. COM2 is connected to TH2816A circuit common.	
	Right(N)	DC isolated outputs are isolated.	
J905	Left (N)	Trigger current limiting resistor is 680Ω. This position should be set when EXV2 is between 5V to 8V or when internal VCC is used for control signals (J903 and J904 are set to the left position).	/TRIG
	Center	Trigger current limiting resistor is 1.2kΩ. This position should be set when EXV2 is between 8V to 15V.	
	Right	Trigger current limiting resistor is 2.2kΩ. This position should be set when EXV2 is between 15V to 24V.	

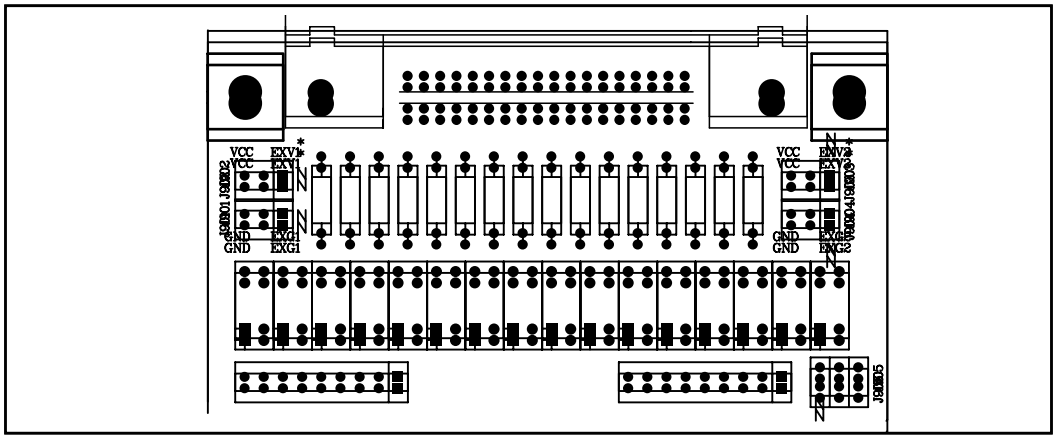

Figure 7-9. Handler Interface Input Signal Diagram

7.5 Operation

To use the handler interface, after setting up the handler interface board, setup the limit table for using the comparator function or the list sweep setup table for using the list sweep comparator function. Then set the handler interface to be enabled to output/input the signals. The following procedures are for using the handler interface with the comparator function or the list sweep comparator function.

7.5.1 Setting Procedure For Comparator Function

The following operation procedures are for using the handler interface with the comparator function.

1) Set the measurement function, test frequency, oscillator signal level, and measurement speed on the ***Meas Setup*** page.
2) Press the SETUP menu key, and the LIMIT softkey. The Limit Table will be displayed.
3) Move the cursor to the ***FUNC*** field, and set if the parameter swap function is used.
4) Move the cursor to the ***MODE*** field, and set the comparator limit mode: %TOL or ±TOL.
5) Move the cursor to the ***COMP*** field, and press softkey ON to enable the comparator function.
6) Move the cursor to the ***AUX*** field. Press softkey ON to enable the AUX BIN, then a device whose primary parameter is within limits, but whose secondary parameter measurement result is not within limits will be sorted into an AUX BIN.
7) The EXT trigger mode is always be used, when a handler interface is used. Press SETUP menu **key**, move the cursor to the ***TRIG*** field and set the trigger mode to EXT. Check if the deviation display mode DEV_A/DEV_B is set to OFF.
8) Press DISPLAY menu key. To perform a measurement, select the LCR, BinNo, COUNT softkey.
9) Comparator function are always used for sorting large amount of components with the same nominal value, so range hold function may be used to increase the measurement efficiency.
10) Move the cursor to the ***File*** field, use the SAVE softkey to save the current control settings and limit table to a file.

7.5.2 Setting Procedure For List Sweep Comparator function

The following operation procedures are for using the handler interface with the list sweep comparator function.

1) Set the measurement function, test frequency, oscillator signal level, and measurement speed on the ***Meas Setup*** page.
2) The EXT trigger mode is always be used, when a handler interface is used. Press SETUP menu key, move the cursor to the ***TRIG*** field and set the trigger mode to EXT. Set deviation display mode DEV_A/DEV_B to ON if you want.
3) Press the SETUP menu key, and the LIST softkey. The ***List Setup*** page will be displayed.
4) Setup a list table including sweep parameter points, parameter compared, and high/low limits for the list sweep measurement.
5) Move the cursor to the ***MODE*** field, and set the sweep mode: SEQ or STEP.
6) Auto ranging always be selected, considering the delay time and source output impedance.
7) Press DISPLAY menu key. To perform list sweep measurement, select the SWEEP softkey.
8) Move the cursor to the ***File*** field, use the SAVE softkey to save the current control settings and list table to a file.