User's Guide

Rev.A1

FIRMWARE REVISIONS

This manual applies directly to instruments that have the firmware **Rev. C7**

AT381x

LCR Meter

Applent Instruments Ltd
No.61-3, Baolong International,Chahua Road, Zhonglou District ,Changzhou City, Jiangsu Province, China [213014]
Tel: 0519-88805550 Fax: 0519-86922220

http://www.applent.com

Sales Email: sales@applent.com
Tech Email: tech@applent.com

©2005-2018 Applent Instruments Ltd.

Safety Summary

⚠WARNING⚠DANGER: When you notice any of the following abnormal conditions, terminate operation immediately and disconnect the power cord. Contact Applent Instruments Sales for repair. Failure to do so may result in fire or potential electrical shock to operators.

- Instrument is operating abnormally.
- Instrument produces abnormal noise, odor, smoke or flash during operation.
- Instrument generates high temperature or electric shock during operation.
- Power cord, power switch, or power outlet is damaged.
- Impurities or liquids flow into the instrument.

Safety Information

⚠WARNING⚠DANGER: To avoid possible electric shock and personal safety, follow guidelines in below.

Disclaimer	Users should read the following safety information carefully before starting to use the instrument. Applent Instruments will not be held liable for any personal safety and property damage caused by user's failure to comply with the following terms.
Ground The instrument	To avoid electric shock hazard, the instrument chassis and cabinet must be connected to a safety earth ground by the supplied power cable with earth blade.
DO NOT Operate in an Explosive Atmosphere	Do not use the instrument in a flammable or explosive atmosphere, steam or dusty environment. The use of any electronic device in such an environment is an adventure for personal safety.
DO NOT Open instrument enclosure	Non-professional maintenance personnel should not open the instrument case in an attempt to repair the instrument. The instrument still has charge after a period of shutdown, which may pose a shock hazard to users.
Do not Use a damaged instrument	If the instrument has been damaged, its danger will be unpredictable. Please disconnect power cord and don’ t use the instrument; do not attempt to repair it.
Do not Use an instrument that works abnormally	If the instrument is not working properly, its danger is unpredictable. Please disconnect power cord and don’ t use the instrument; do not attempt to repair it.
Do not Use the instrument beyond instructions specified in this manual	If out of scope, the protection provided by the instrument will be invalid.

CERTIFICATION, LIMITED WARRANTY, & LIMITATION OF LIABILITY

Applent Instruments, Inc. (shortened form **Applent**) certifies that this product met its published specifications at the time of shipment from the factory. Applent further certifies that its calibration measurements are traceable to the People's Republic of China National Institute of Standards and Technology, to the extent allowed by the Institution's calibration facility or by the calibration facilities of other International Standards Organization members.

This Applent instrument product is warranted against defects in material and workmanship for a period corresponding to the individual warranty periods of its component products. **The warranty period is 1 year and begins on the date of shipment.** During the warranty period, Applent will, at its option, either repair or replace products that prove to be defective. This warranty extends only to the original buyer or end-user customer of a Applent authorized reseller, and does not apply to fuses, disposable batteries or to any product which, in Applent's opinion, has been misused, altered, neglected or damaged by accident or abnormal conditions of operation or handling.

For warranty service or repair, this product must be returned to a service facility designated by Applent. The buyer shall prepay shipping charges to Applent and Applent shall pay shipping charges to return the product to the Buyer. However, the Buyer shall pay all shipping charges, duties, and taxes for products returned to Applent from another country.

Applent warrants that its software and firmware designated by Applent for use with an instrument will execute its programming instruction when properly installed on that instrument. Applent does not warrant that the operation of the instrument, or software, or firmware, will be uninterrupted or error free.

The foregoing warranty shall not apply to defects resulting from improper or inadequate maintenance by the Buyer, Buyer-supplied software or interfacing, unauthorized modification or misuse, operation outside the environmental specifications for the product, or improper site preparation or maintenance.

THIS WARRANTY IS BUYER'S SOLE AND EXCLUSIVE REMEDY AND IS IN LIEU OF ALL OTHER WARRANTIES, EXPRESS OR IMPLIED, INCLUDING BUT NOT LIMITED TO ANY IMPLIED WARRANTY OF MERCHANTABILITY OR FITNESS FOR A PARTICULAR PURPOSE. APPLENT SHALL NOT BE LIABLE FOR ANY SPECIAL, INDIRECT, INCIDENTAL OR CONSEQUENTIAL DAMAGES OR LOSSES, INCLUDING LOSS OF DATA, WHETHER ARISING FROM BREACH OF WARRANTY OR BASED ON CONTRACT, TORT, RELIANCE OR ANY OTHER THEORY.

Applent Instruments, Inc.
Changzhou,
Jiangsu,
China,
Rev.A3 October, 2009

Contents

Safety Summary 2
Safety Information 2
CERTIFICATION, LIMITED WARRANTY, & LIMITATION OF LIABILITY 3
Contents 4
Figure Contents 10
Table Contents 12
1. Unpacking and Preparation 13
1.1 Packing List 13
1.2 Power Requirements 13
1.3 Operating Environment 13
1.4 Cleaning 13
1.5 How to Remove the Handle 15
2. Overview 16
2.1 Introduction 16
2.2 Measurement Function 17
2.2.1 Measurement Parameters 17
2.2.2 Equivalent Method 17
2.2.3 Range 18
2.2.4 Test Speed 18
2.2.5 Trigger Mode 18
2.2.6 Basic Accuracy 18
Measurement Display Range 18
2.3 Signal Source 19
2.3.1 Test Frequency 19
2.3.2 Test Signal Level 19
2.3.3 Constant Voltage Source Internal Resistance 19
Test Signal Level Monitoring 19
2.3.4 DC bias 19
2.4 Main Functions 20
2.4.1 Correction Function 20
2.4.2 Comparator Function (Sorting Function) 20
2.4.3 List Sweep 20
2.4.4 File Function 20
2.4.5 System Settings 21
2.4.6 Interface 21
3. Startup 22
3.1 Front Panel 22
3.1.1 Front Panel Description 22
3.1.2 Rear Panel 23
3.2 Power On 23
3.2.1 Power On 23

3.2.2 Warm-up Time 23
3.3 Connect to Device under Test (DUT) 23
4. [Meas] Page 25
4.1 <MEAS DISPLAY> Page 25
4.1.1 Measurement Function [FUNC] 25
4.1.2 Impedange Range [RANGE] 27
4.1.3 Test Frequency [FREQ] 28
4.1.4 Trigger Mode [TRIG] 29
4.1.5 Test Signal Voltage Level [LEVEL] 29
4.1.6 Measurement Speed [SPEED] 30
4.1.7 [Record] Data 31
4.1.8 <Meas Display> Page Information Bar 31
4.2 <BIN No. DISPLAY> Page 32
4.2.1 [Comparator] Function ON/Off 32
4.2.2 Auxiliary Bin [AUX] ON/OFF 33
4.2.3 Information Bar of [Bin No. Display] 34
4.3 <BIN COUNT DISPLAY> Page 34
4.3.1 Counter Function [COUNT] 34
4.4 <LIST SWEEP DISPLAY> Page 35
4.4.1 Sweep Trigger Mode [TRIG] 35
4.4.2 Sweep [Method] Settings 36
4.5 <<Measure Full Screen Display> Page 36
5. [Setup] Key 37
5.1 <MEAS SETUP> Page 37
5.1.1 Source Output Impedance [SRC RES] 38
5.1.2 Averaging Factor [AVG] 38
5.1.3 DC Bias Voltage 39
5.1.4 Auto LCZ Function [AUTO LCZ] 39
5.1.5 Monitor 1 and Monitor 2 [MON 1][MON 2] Parameter Selection 39
5.1.6 Measurement [Delay] 40
5.1.7 [Constant Level] Function 40
5.1.8 [Nominal Value] Setting 40
5.2 <CORRECTION> Page 40
5.2.1 Open correction [OPEN] 41
5.2.2 Short Correction [SHORT] 42
5.2.3 Frequency 1, 2, 3 Correction [FREQ 1] [FREQ 2] [FREQ3] 43
5.3 Comparator Setup 45
5.3.1 【Function】 Setup 46
5.3.2 Comparator Function ON/OFF 46
5.3.3 Compare【Mode】 46
5.3.4 Nominal value for tolerance mode 48
5.3.5 [Auxiliary] Bin ON/OFF 48
5.3.6 【Beep】feature 48
5.3.7 Total Number of Bins [#-BINS] 49
5.3.8 Lower and Upper Limits Setup 49
5.4 <LIST SWEEP SETUP> Page 50

5.4.1 Sweep Trigger Mode [TRIG] 50
5.4.2 List Sweep Parameters Setup 51
5.4.3 Configure the sweep points 51
5.4.4 Limit parameters [CMP] selection 51
5.4.5 Input [Lower] and [Upper] Limits Value 52
6. System Configurations 53
6.1 <SYSTEM CONFIG> Page 53
6.1.1 System Language [LANGUAGE] 53
6.1.2 Setting the system date and time 54
6.1.3 Account Setting 54
6.1.4 Beep Tone Setting 55
6.1.5 RS-232 Baud Rate Setting 55
6.1.6 [Communication Protocol] Settings 55
6.1.7 【Terminator】Setting 56
6.1.8 [Command Handshake] ON/OFF 56
6.1.9 【Error Code】ON/OFF 57
6.1.10 [Result Send] Setting 57
6.1.11 [Data Cache] 58
6.1.12 [Factory Setting] 58
6.2 System Information Page 58
7. File Operation 59
7.1 <CATALOG> Page 59
7.1.1 [Memory] Selection 59
7.1.2 Recall a File at Startup [AUTO RECALL] 60
7.1.3 Auto save data to last file [AUTO SAVE] 60
7.1.4 File operation 60
8. PLC（Handler）Interface 61
8.1 Pin Assignment 61
8.2 How to Connection 62
8.3 Timing Chart 63
9. Remote Control 65
9.1 About RS-232C 65
9.1.1 RS232C Connection 65
9.1.2 How to Connect 66
9.2 Protocol 66
9.3 SCPI Protocol： 66
9.3.1 Modbus(RTU) Protocol 67
10. SCPI Command Reference 68
10.1 Handshake Protocol 68
10.2 Terminator 68
10.3 Terminator 69
10.3.1 Terminator Rules 69
10.3.2 Notation Conventions and Definitions 69
10.3.3 Command Structure 70
10.4 Header and Parameters 70
10.4.1 Header 70
10.4.2 Parameter 70

10.4.3 Separator 71
10.4.4 Error Code 71
10.5 Command Reference 72
10.6 DISPlay Subsystem 72
10.6.1 DISP:PAGE 73
10.6.2 DISP:LINE 73
10.7 FUNCtion Subsystem 74
10.7.1 FUNCtion 74
10.7.2 FUNCtion:IMPedance:AUTO 74
10.7.3 FUNCtion:IMPedance:RANGe 75
10.7.4 FUNCtion:DCR:RANGe 75
10.7.5 FUNCtion:RANGe:AUTO 75
10.7.6 FUNCtion:MONitor1 /2 75
10.8 FREQuency Subsystem 76
10.9 LEVel Subsystem 76
10.9.1 LEVel:VOLTage (=VOLTage[:LEVel]) 77
10.9.2 LEVel:CURRent (=CURRent[:LEVel]) 77
10.9.3 LEVel:SRESistance (= VOLTage:SRESistance) 77
10.9.4 LEVel:ALC (=AMPlitude:ALC) 78
10.10 APERture Subsystem 78
10.10.1 APERture:RATE? 78
10.10.2 APERture:AVG? 79
10.11 FETCh Subsystem 79
10.11.1 FETCh? 79
10.11.2 FETCh:IMPedance? 79
10.11.3 FETCh:MAIN? 79
10.11.4 FETCh:MONitor1? /2? 80
10.11.5 FETCh:MONitor? 80
10.12 COMParator Subsystem 80
10.12.1 COMParator:STATe 81
10.12.2 COMParator:MODE 81
10.12.3 COMParator:AUX 82
10.12.4 COMParator:BINS 82
10.12.5 COMParator:TOLerance:NOMinal 82
10.12.6 COMParator:TOLerance:BIN 82
10.12.7 COMParator:SLIM 83
10.12.8 COMParator:BEEP 83
10.12.9 COMParator:OPEN 83
10.13 LIST Subsystem 84
10.13.1 LIST:PARAmeter 84
10.13.2 LIST:STAT 84
10.13.3 LIST:BAND 84
10.14 CORRection Subsystem 85
10.14.1 CORRection:OPEN 86
10.14.2 CORRection:SHORt 87

10.14.3 CORRection:SPOT:FREQuency 87
10.14.4 CORRection:SPOT:OPEN 87
10.14.5 CORRection:SPOT:SHORt 87
10.15 TRIGger Subsystem 88
10.15.1 TRIGger[:IMMediate] 88
10.15.2 TRIGger:SOURce 88
10.15.3 TRIGger:DELAY 88
10.16 BIAS Subsystem 89
10.17 FILE Subsystem 89
10.17.1 FILE? 89
10.17.2 FILE:SAVE 89
10.17.3 FILE:LOAD 90
10.17.4 FILE:DELete 90
10.18 ERRor Subsystem 90
10.18.1 ERRor? 90
10.19 SYSTEM Subsystem 90
10.19.1 SYSTem:SHAKehand 90
10.19.2 SYSTem:CODE 91
10.19.3 SYSTem:KEYLock 91
10.19.4 SYSTem:RESult 91
10.20 Common Commands 91
10.20.1 *IDN? 91
10.20.2 *TRG 91
10.20.3 *SAV 92
10.20.4 *RCL 92
11. Modbus（RTU）Protocol 93
11.1 Data Format 93
11.1.1 Command Frame 93
11.1.2 CRC-16 Calculation Method 94
11.1.3 Response Frame 95
11.1.4 No Response 95
11.1.5 Error Code 96
11.2 Function Code 96
11.3 Register 96
11.4 Read Multiple Registers 96
11.5 Writing to Multiple Registers 97
11.6 Echo Test 98
12. Modbus（RTU）Command 100
12.1 Register Overview 100
12.2 Obtain Measurement Data 104
12.2.1 Obtain measurement data 104
12.2.2 Obtain Comparator Results 【2004】 105
12.3 Parameter Setting 106
12.3.1 Function Register【3000】 106
12.3.2 LCR Range Register【3001】 107

12.3.3 Range Mode Register【3002】 107
12.3.4 Test Speed Register【3003】 108
12.3.5 Average Times Register【3004】 109
12.3.6 Trigger Mode Register【3005】 109
12.3.7 Test Frequency Register【3006】【3007】 110
12.3.8 Test Voltage Register【3008】【3009】 110
12.3.9 DCR Range Register【300A】 111
12.3.10 Startup File Recall Register【300C】 112
12.3.11 Auto Save【300D】 112
12.3.12 System Language Setting【300E】 113
12.3.13 Test Current Register【3010】【3011】 113
12.3.14 DC Bias Register【3012】【3013】 114
12.4 Comparator Setting 115
12.4.1 Comparator Status Register【3100】 115
12.4.2 Comparator Mode Register【3101】 115
12.4.3 Secondary Comparator ON/OFF Register【3102】 116
12.4.4 Comparison Bin No. Register【3103】 117
12.4.5 Alarm Register【3104】 117
12.4.6 Nominal Value Register【310A】【310B】 118
12.4.7 Secondary Parameter Limit Value Register【310C-310F】 118
12.4.8 Primary Parameter Limit Value Register【3110-3133】 119
12.5 File Operation 119
12.5.1 Save to Current File【4000】 120
12.5.2 Save to Specified File【4008】 120
12.5.3 Reloading the Current File【4010】 120
12.5.4 Load the Specified File【4018】 121
12.6 Correction 121
12.6.1 Full-frequency Open Circuit Correction【5000】 121
12.6.2 Full-frequency Short-circuit Correction【5008】 122
12.6.3 Point frequency Correction Setting【5010~5015】 123
12.6.4 Point Frequency Open Circuit Correction【5020】 123
12.6.5 Point Frequency Short Circuit Correction【5028】 124
12.7 System Setup 125
12.7.1 Instrument version number【0000】 125
13. Performace Test 126
13.1 Accuracy 126
13.1.1 Accuracy for L, C, R, |Z| 126
13.1.2 D Accuracy 126
13.1.3 Q Accuracy 126
13.1.4 θ Accuracy 127
13.1.5 R_p Accuracy 127
13.1.6 R_s Accuracy 127
13.2 Accuracy Factor 127
13.3 Performace Test 130
13.3.1 Devices and Equipment Used for Performance Test 130
13.3.2 Function check 131

13.3.3 Test signal level accuracy test 131
13.3.4 Frequency accuracy test 131
13.3.5 Capacitance C, loss D accuracy test 131
13.3.6 Inductance L accuracy test 131
13.3.7 Impedance Z accuracy test 131
14. Examples 133
14.1 Basic Measurement Procedure 133
14.2 Example 134
15. Specification 136
15.1 Technical Indicators 136
15.2 General Specification 136
15.3 Dimensions 138

Figure Contents

Figure 1-1 Instrument handle (schematic, panel graphics do not match the actual) 15
Figure 3-1 front panel 22
Figure 3-2 rear panel 23
Figure 3-3 Connect to DUT 23
Figure 4-1 <MEAS DISPLAY> Page 25
Figure 4-2 <BIN No. DISPLAY> page 32
Figure 4-3 Comparator Workflow 32
Figure 4-4 <BIN COUNT DISPLAY > page 34
Figure 4-5 <LIST SWEEP DISPLAY> page 35
Figure 4-6 Sweep Mode 35
Figure 4-7 <Measure Full Screen Display> Page 36
Figure 5-1 <MEAS SETUP> Page 37
Figure 5-2 <CORRECTION> Page 41
Figure 5-3 Stray Admittance 41
Figure 5-4 Residual Impedances 42
Figure 5-5 < COMP Setup > page 45
Figure 5-6 Tolerance mode 46
Figrue 5-7 Example of sorting in tolerance mode 47
Figure 5-8 sequential mode: 47
Fiture 5-9 <LIST SWEEP SETUP> Page 50
Figure 5-10 Sweep Mode 50
Figure 6-1 <SYSTEM CONFIG> Page 53
Figure 6-2 < System Information> page 58
Figure 7-1 <CATALOG> Page 59
Figure 8-1 Pin Assignment 61
Figure 8-2 Typical Circuit Diagram of Handler Interface Input signals（Trig） 62
Figure 8-3 Typical Circuit Diagram of Handler Interface Output signals（sorting，IDX，EOM） 63
Figure 8-4 Signal timing chart 63
Figure 9-1 RS-232 interface on the rear panel [male] 65
Figure 9-2 RS-232 interface on the rear panel [male] 66

Figure 10-1 Command Tree Structure 70
Figure 11-1 Modbus Command Frame 93
Figure 11-2 Modbus append CRC-16 value 94
Fiture 11-3 Normal response frame 95
Figure 11-4 Abnormal response frame 95
Figure 11-5 Read Multiple Registers（0x03） 96
Figure 11-6 Read Multiple Registers（0x03）Response Frame 97
Figure 11-7 Writing to multiple registers（0x10） 97
Figure 11-8 Write to Multiple Registers（0x03）Response Frame 98
Figure 11-9 echo test（0x08） 98
Figure 13-1 Basic measurement accuracy A 127
Figure 13-2 Basic accuracy correction curve 128
Figure 14-1 Measurement flow chart 133
Figure 14-2 Capacitor test results 135

Table Contents

Table 2-1 Series-parallel equivalent circuit 17
Table 2-2 AT381x Measurement display range 18
Table 2-3 Test signal accuracy 19
Table 3-1 Front Panel Description 22
Table 4-1 The combinations of measurement parameters 26
Table 4-2 The combinations of monitor parameters 26
Table 4-3 Measurement and Monitor parameter descriptions 26
Table 4-4 Impedance range mode 27
Table 4-5 Range and corresponding test range 27
Table 4-6 AT381x frequency resolution 28
Table 4-7 AT3818 the most commonly used frequency list 28
Table 4-8 AT3816A/AT3816B List of the most common frequencies 28
Table 4-9 AT3817A Frequency list 28
Table 4-10 AT3810A List of the most common frequencies 29
Table 4-11 The most commonly used level list 30
Table 4-12 Sweep trigger mode 35
Table 4-13 sweep method 36
Table 5-1 Sweep trigger mode description 50
Table 6-1 SCPI error code 57
Table 8-1 Description of Handler Interface Output Signals 61
Table 8-2 Description of Handler Interface Input Signals 62
Table 8-3 Description of Handler Interface Power Rating Signals 62
Table 8-4 Timing 63
Table 9-1 The minimum subset of the RS-232 standard 65
Table 10-1 Multiplier Mnemonics 71
Table 10-2 SCPI error code 71
Table 11-1 Command Frame Description 93
Table 11-2 Description for abnormal response frame 95
Table 11-3 Description for Error Code 96
Table 11-4 Function code 96
Table 11-5 Read Multiple Registers 97
Table 11-6 Writing to multiple registers 97
Table 12-1 Register Overview 100
Table 13-1 Impedance scale factor Ka, Kb 129
Table 13-2 Temperature factor Kc 129
Table 13-3 Calibration interpolation factor Kf 130
Table 13-4 Cable length factor 130
Table 13-5 Devices and equipment used for performance testing 130

1. Unpacking and Preparation

Thank you for purchasing our products. Please read this chapter carefully before use.
In this chapter you will learn the following:

- Packing List
- Power Requirements
- Operating Environment
- Cleaning
- How to Remove the Handle

1.1 Packing List

Before using the instrument, please:
1. Check appearance of the product whether there is damage, scratches, etc.;
2. Check the instrument packing list if there are any missing items.
If there is any damage or insufficient accessories, please contact Applent Instruments Sales or distributor immediately.

1.2 Power Requirements

AT381x can only be used in the following power conditions:

Voltage: 90V-260VAC
Power: up to 30VA



Warning: To prevent electric shock, please connect the power ground.
If users replace power cord, make sure that the ground of the power cord is securely connected.

1.3 Operating Environment

AT381x must be used under the following environmental conditions:
Temperature: 0°C ~ 55°C,
Humidity: < 70% RH at 23℃

1.4 Cleaning

To prevent the risk of electric shock, unplug the power cord before cleaning.
To prevent electrical shock, disconnect the AT381x power cable from the receptacle before cleaning.
Use a dry cloth or a cloth slightly dipped in water to clean the casing. Do not attempt to clean

the AT381x internally.



WARNING: Don’ t Use Organic Solvents (such as alcohol or gasoline) to clean the instrument.

1.5 How to Remove the Handle

Instrument handle can be adjusted. Hold both sides of the handle with both hands, gently pull it to the sides, then rotate the handle. The handle can be adjusted to four positions as shown below:

Figure 1-1 Instrument handle (schematic, panel graphics do not match the actual)

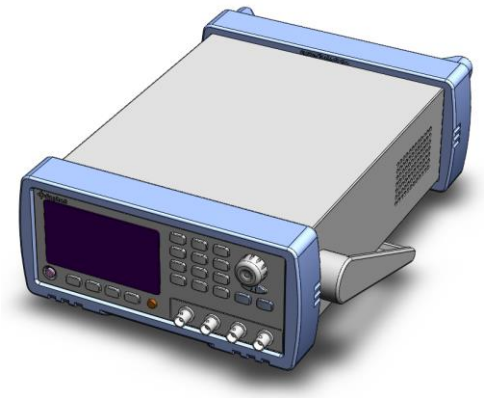

Visible position 1 [Hands hold both sides of the handle at the same time, gently pull it to the sides until it can rotate freely, then switch to the visible position 2]



Visible position 2 [hold both sides of the handle at the same time, gently pull it to the sides until it can rotate freely, then switch to the handheld position]

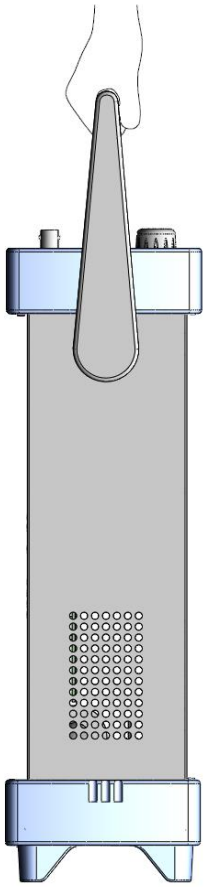

Handheld position

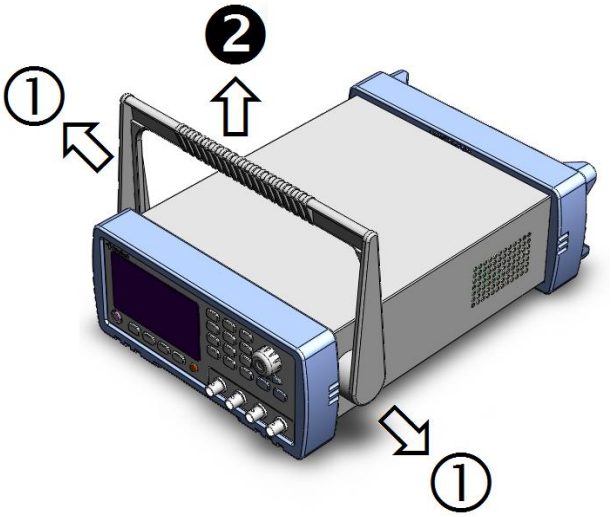

Remove handle position. (Pull to both sides until the handle is removed.)

2. Overview

This chapter contains general information about AT381x. The information is organized as follows

- Introduction
- Measurement Function
- Signal Source
- Main Functions

2.1 Introduction

Thank you for purchasing AT381X LCR meter.

AT381X is precision LCR meter that uses a fully automated real-time inspection micro-desktop instrument controlled by high-performance 32-bit ARM microprocessor. The instrument can select any test frequency between 10Hz and 300kHz, and can select test signal level between 0.01V and 2.00V with 0.01V steps. Built-in -2.5V~+2.5V programmable DC bias automatically measures inductance L, capacitance C, resistance value R, complex impedance Z, quality factor Q, loss tangent value D, phase angle θ (degrees), phase θ (radian), and DC resistance DCR.

The primary and secondary parameters are displayed in all 6 digits, there are two monitoring displays at the same time. One of Z, D, Q, θr, θd, R, X, G, B, Y, Vac, Iac, Δ, Δ% can be displayed at the same time. With an accuracy of up to 0.05%, the instrument can meet requirements of accurate testing and mass production by various component manufacturers, schools, research institutes and metrological quality inspection departments.

The instrument has a professional sorting function, with 10 sets of storage files,

programmable 9 qualified file, 1 auxiliary file (secondary-parameter unqualified), 1 unqualified file and primary parameter HI/IN/LO file, can set percentage points or absolute value sorting, equipped with Handler interface and RS-232C interface, used in automatic sorting system to complete automatic pipeline testing. An optional USB memory interface allows users to save setup data and measurement data to an external mover.

The instrument supports two kinds of communication protocols: computer remote control instruction is compatible with SCPI (Standard Command for Programmable Instrument standard command set) and Modbus communication protocol, remote control and data acquisition functions are efficiently completed.

Reference: 

See 11. Specifications section for complete technical specifications.

2.2 Measurement Function

2.2.1 Measurement Parameters

Measurement parameters: Cs-Rs, Cs-D, Cp-Rp, Cp-D, Lp-Rp, Lp-Q, Ls-Rs, Ls-Q, G-B, R-X, Z-θr, Z-θd 和 DCR。

Among them:

L: Inductance C: Capacitance R: Resistance Z: Impedance X: Reactance

B: Density G: Conductance D: Loss θ: Phase angle Q: Quality factor

DCR: DC resistance

The subscript s indicates serial equivalent, p indicates parallel equivalent

2.2.2 Equivalent Method

Series, Parallel.

The actual capacitance, inductance, and resistance are not ideal for pure reactance and purely resistive components. They usually have both resistance and reactance components. An actual impedance component can be modeled in series or parallel by an ideal resistor and an ideal reactor (inductor or capacitor).

It can be mathematically converted using a formula, but the two forms are different, inconsistency depends on the quality factor Q (or loss D).

Table 2-1 Series-parallel equivalent circuit

Circuit Form		Loss D	Equivalent Conversion
L	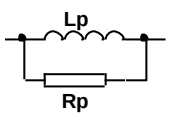	$D=2\pi FLp/Rp=1/Q$	$Ls=Lp/(1+D^2)$ $Rs=RpD^2/(1+D^2)$
	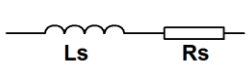	$D=Rs/2\pi FLs=1/Q$	$Lp=(1+D^2)Ls$ $Rp=(1+D^2)Rs/D^2$

C	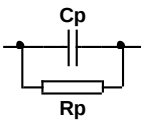	D=1/2πFCpRp=1/Q	Cs=(1+D²)Cp Rs=RpD²/(1+D²)
	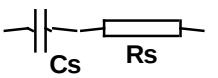	D=2πFCsRs=1/Q	Cp=Cs/(1+D²) Rp=Rs(1+D²)/D²

Definition for Q、D、Xs is：Q=Xs/Rs，D=Rs/Xs，Xs=1/2πFCs=2πFLs

Suggestion：

Generally, a series equivalent circuit is used for components having a low impedance value Z (for example, a high value capacitor and a low value inductor); a parallel equivalent circuit is used for a component having a large impedance value Z (low value capacitor and high value inductor).

At the same time, equivalent circuit must be determined according to the actual use of component, such as capacitors, series equivalent circuit is used for power supply filtering, parallel equivalent circuit is used for LC oscillation circuits.

2.2.3 Range

Use 9-range test, auto, lock and nominal.

Nominal range (Applent new term definition): The instrument automatically selects the best range based on nominal value.

2.2.4 Test Speed

The instrument is divided into four speeds: slow speed, medium speed 1, medium speed 2 and fast speed.

Fast speed: 40 times / sec

Medium speed: 10 times / sec

Slow speed: 3 times / sec

At the same time, 1-256 programmable average times can be performed to improve reading stability.

2.2.5 Trigger Mode

Internal, external, manual, and remote trigger.

2.2.6 Basic Accuracy

AT3818 0.05%

AT3816A 0.05%

AT3816B 0.1%

AT3817A 0.05%

AT3810A 0.05%

AT3817D 0.1%

Measurement Display Range

Table 2-2 AT381x Measurement display range

Parameter	Measurement display range
L	0.00001nH ~ 9999.99H
C	0.00001pF ~ 9999.99mF
R、X、Z	0.00001Ω ~ 99.9999MΩ
B、G	0.01nS ~ 999.999S
D	0.00001 ~ 9.99999
Q	0.00001 ~ 99999.9
θd	-179.999°~179.999°
θr	-3.14159 ~ 3.14159
%	-999.999% ~ 999.999%

2.3 Signal Source

2.3.1 Test Frequency

AT3818: 10Hz~300kHz continuous test frequency
AT3816A: 50Hz~200kHz continuous test frequency
AT3816B: 50Hz~200kHz 37 points
AT3817A: 50Hz~100kHz continuous test frequency
AT3810A: 10Hz~20kHz continuous test frequency
AT3817D: 50Hz~100kHz, 10 points
Frequency accuracy: 0.01%

2.3.2 Test Signal Level

ACV: 10.00mV~2.00V, Accuracy: 10%, CV mode accuracy: 6%
ACI: 100.0μA~20.00mA, Accuracy: 10%, CC mode accuracy: 6% @2Vmax
DCR: ±1VDC (2Vpp) square wave, 3Hz Maximum
0.033A (Max), output impedance 30Ω

2.3.3 Constant Voltage Source Internal Resistance

Can be set to 30Ω、50Ω and 100Ω

Test Signal Level Monitoring

Table 2-3 Test signal accuracy

Mode	Range	Accuracy
Voltage	$10mV_{RMS}$ - $2.00V_{RMS}$	± (3%×reading+0.5mV)
	$0.01mV_{RMS}$ - $10mV_{RMS}$	± (12%×reading+0.1mV)
Current	$100\mu A_{RMS}$ - $66mA_{RMS}$	± (3%×reading+5μA)
	$0.001\mu A_{RMS}$ - $100\mu A_{RMS}$	± (12%×reading+1μA)

2.3.4 DC bias

-2.5V~+2.5V
Accuracy: 0.5% (±0.005V)

2.4 Main Functions

2.4.1 Correction Function

Open clear zero: Eliminate effects of stray impedance on the test side and the instrument.
The instrument can perform single-point, three-point frequency open circuit clear zero or sweep frequency (all typical frequency) open circuit clear zero.
Short-circuit clear zero: Eliminate effects of series resistance and inductance of the leads.
The instrument can perform single point, thre-point frequency short circuit clear zero or sweep frequency (all typical frequency) short circuit clear zero.

2.4.2 Comparator Function (Sorting Function)

The instrument can perform multiple sorting, sorting is based on the measured values, regardless of deviation mode.
PASS file (BIN1-BIN9): indicates that both of primary and secondary parameters are qualified;
Auxiliary file (AUX): indicates that primary parameter is qualified but secondary parameter is unqualified when the auxiliary file is opened;
FAIL (OUT): The primary parameter is unqualified, or the primary parameter is qualified but the secondary parameter is unqualified when the auxiliary file is closed.
HI/IN/LO: More detailed comparison results of primary parameters, HI: primary parameters are high, LO: primary parameters are low, IN: primary parameters are qualified

- **Comparison Method:**

Absolute tolerance ±TOL sorting: The absolute deviation of measured value from nominal value is compared with the limit of each bin.
Percentage tolerance %TOL sorting: The percentage deviation of measured value from nominal value is compared to the limit of each bin.
Sequential comparison sorting: The measured value is directly compared with the upper and lower limits

- **Bin count:**

Each bin corresponds to a bin counter, the counting range: 0～999999。

- **Bin display:**

There is a bin display page and a bin count display page.
All comparator results have corresponding IO port outputs on the Handler interface.

2.4.3 List Sweep

List sweep can be performed up to 10 points frequency or 10 points voltage.
List sweep comparator: Each list sweep point can output HI/IN/LO (high/pass/low) discrimination.
The list sweep limit sets are the upper and lower limit values.

2.4.4 File Function

There are 10 files in the instrument's internal flash memory that users can use to save instrument data. These data include:
1. All parameters in <Settings> page
2. Setting data in <Comparator Setting> page

3. Setting data in <Setup List Sweep> page

2.4.5 System Settings

1. Keyboard lock function
2. 2. Administrator and user accounts, which can set passwords for administrators

2.4.6 Interface

USB Host Interface:

Used to save screen images, save setup parameters and measurement data on a USB flash drive.

RS-232 Remote Control:

Supports baud rate up to 115200bps, compatible with SCPI protocol and Modbus RTU protocol.

Handler Interface

Full optocoupler isolation, input and output ports with built-in pull-up resistors.

Supports up to 30V external power supply.

Input: trigger signal,

Output: All sorting comparison result signals and list sweep comparison result signals; measurement synchronization signals (IDX, EOM).

3.Startup

In this chapter you will learn the following:

- Front panel – including the introduction of buttons and test terminals.
- Rear panel – describes the power and interface information.
- Power on—including power on self-test process, instrument defaults, and instrument warm-up time.
- Display information – information about the prompts that will be encountered during startup and use of the instrument.
- Start testing - including how to connect to the test side

3.1 Front Panel

3.1.1 Front Panel Description

Figure 3-1 Front panel

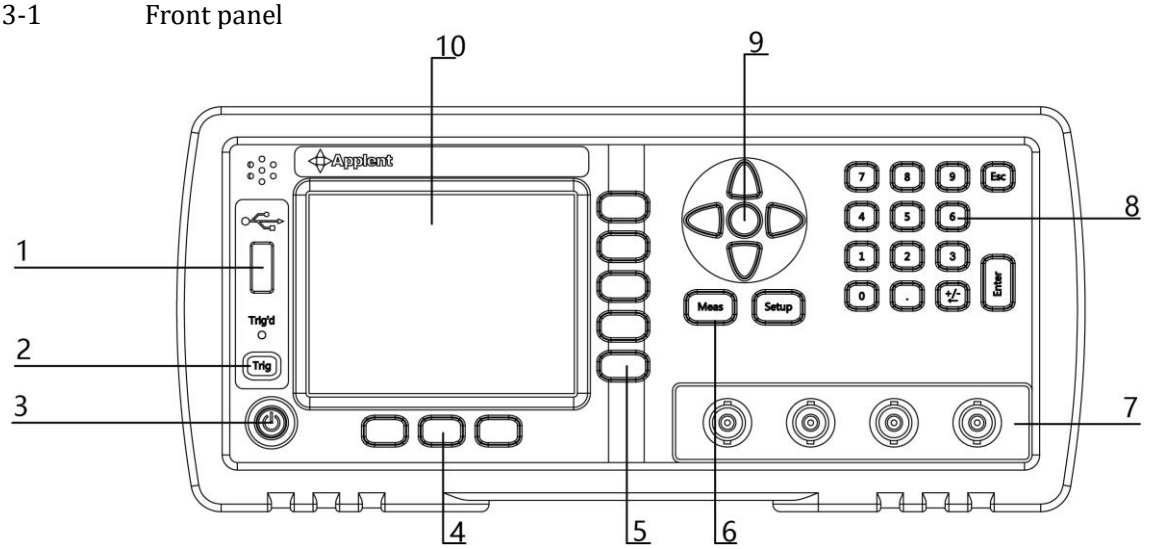

Table 3-1 Front Panel Description

No.	Description
1	USB Disk Port (USB-Host)
2	Manual trigger button, and manual or remote trigger indicator
3	Power switch. Touch button ⚠Warning: In order to ensure the safety of power supply inside the machine, the instrument needs to wait 2 seconds after the power is turned off to allow it to start again.
4	System soft keys, including files, systems, keyboard locks, etc.
5	Function softkey
6	Main soft keys: Meas and Setup
7	Test terminal: The input is used to connect a four-terminal test fixture or Kelvin clip.

	Hcur high terminal - current side Hpot high terminal - voltage side Lpot low terminal - voltage side Lcur low terminal - current side
8	Numeric keypad
9	Cursor key
10	LCD Display

3.1.2 Rear Panel

Figure 3-2 Rear panel

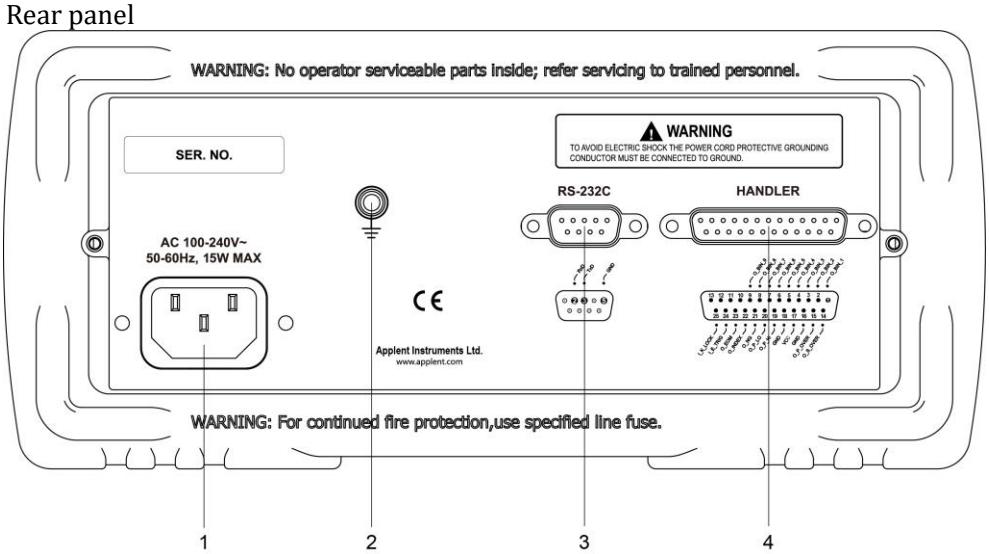

1. Power Cable Receptacle (Outlet)
2. GND.
3. RS-232 interface
4. HANDLER interface

3.2 Power On

3.2.1 Power On

Power switch at the bottom left of the panel. The button is a touch button, press the power button for 1s, the instrument will start or shut down.



In order to ensure the safety of power supply inside the machine, the instrument needs to wait 2 seconds after the power is turned off to allow it to start again.

3.2.2 Warm-up Time

In order to achieve the accuracy rating, warm up the instrument for at least 30 minutes.

3.3 Connect to Device under Test (DUT)

If using Kelvin test clip provided along with the instrument, connect to the instrument test terminal as follows.

Figure 3-3 Connect to DUT

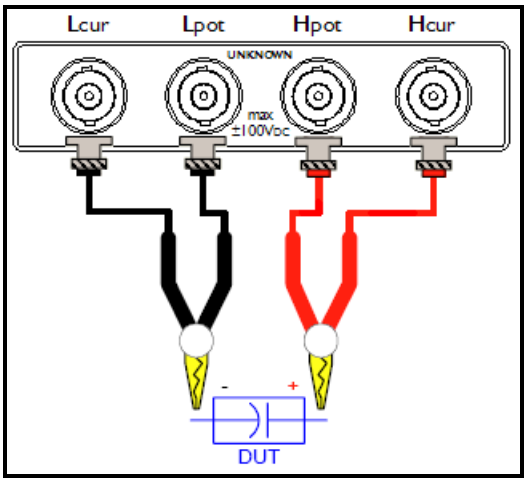

Warning: Do not apply DC voltage or current to the test terminal, otherwise the instrument will be damaged.

WARNING: If test a charged device, make sure that its charge is removed before measuring.

• Test fixtures and cables:

We recommend that users use our test fixtures or test cables, if using test fixtures or cables made by user or other company may result in incorrect measurements.

Our test fixture contact reeds are silver plated or gold plated. In long-term work (for example, 1~2 years), the plating surface will be worn. It is recommended to replace the new fixtures when there are obvious deviations in several tests.

Connect test fixture or test cable to four test terminals of Hcur, Hpot, Lcur, and Lpot on the front panel of the instrument.

Note:

When the test fixture or test cable is not installed, instrument will display unstable measurement.

4. [Meas] Page

This section includes the following information:

- MEAS DISPLAY page
- BIN No. page
- BIN COUNT page
- LIST SWEEP page

4.1 <MEAS DISPLAY> Page

Press [Meas] key to enter <MEAS DISPLAY> page.

<Meas Display> page mainly highlights measurement results and displays the current sorting result in small characters.

The following 6 common functions can be set on this page

- Recording – Record test data in a USB disk file
- Function - Measurement function
- Range - Test range, range number and automatic/manual test.
- Frequency - Test frequency
- Trigger - Trigger Setup
- Level - Test signal level
- Speed – Test speed

The primary and secondary test results are displayed in this area in large characters, monitor area is displayed in small characters.

In the lower part of the screen, some measurement-related settings are displayed in this area, and the currently tested comparator results are also displayed here.

Figure 4-1 <MEAS DISPLAY> Page

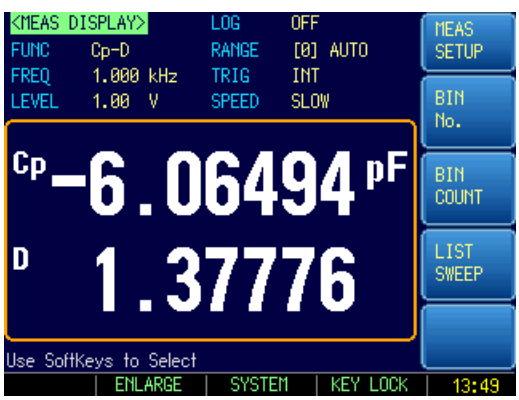

4.1.1 Measurement Function [FUNC]

AT381x simultaneously measures four components of the complex impedance (parameters) in a measurement cycle. These include primary parameter, secondary parameter and two

monitor parameters.

Note:

The monitor parameters need to be set in [Setup] page.

The monitor parameters are initially set to OFF.

Types of measurement parameters:

Table 4-1 The combinations of measurement parameters

Cs-Rs	Cs-D	Cp-Rp	Cp-D
Lp-Rp	Lp-Q	Ls-Rs	Ls-Q
Rs-Q	Rp-Q	R-X	DCR
Z-θr	Z-θd	Z-D	Z-Q

■ Monitor parameters:

Table 4-2 The combinations of monitor parameters

Z	D	Q	
Vac	Iac	Δ	Δ%
θr	θd	R	X
G	B	Y	

■ Measurement and Monitor parameter descriptions:

Table 4-3 Measurement and Monitor parameter descriptions

Parameter	Description
Cs	Capacitance value measured using the series equivalent circuit model
Cp	Capacitance value measured using the parallel equivalent circuit model
Ls	Inductance value measured using the series equivalent circuit model
Lp	Inductance value measured using the parallel equivalent circuit model
Rs	Series equivalent resistance
Rp	Parallel equivalent resistance
DCR	DC resistance
Z	Absolute value of impedance
Y	Absolute value of admittance
G	Conductance
B	Sustenance
R	Resistance (=Rs)
X	Reactance
D	Dissipation factor
Q	Quality factor(=1/D)
θr	Phase radian
θd	Phase angle
Vac	Test signal Voltage
Iac	Test signal Current
Δ	Absolute deviation value
Δ%	Relative deviation value

■ Procedure for setting the measurement function [FUNC]

Step 1 Press [Meas] to enter Meas page;

Step 2 Press [Meas Display] key to switch to the <Meas Display> page;

Step 3 Use cursor keys to select the [Function] field;

Step 4 Use soft keys to select the combination of primary and secondary parameters

4.1.2 Impedange Range [RANGE]

Table 4-4 Impedance range mode

Mode	Function overview	Advantage	Disadvantage
Auto range	The instrument automatically selects the best test range based on impedance value. The range number in range field is automatically set.	Users do not need any participation	Auto range requires predictive range and test speed will be lower than the manual range mode, which is especially noticeable at low frequencies (below 1 kHz).
Hold range	Measurement is performed with a fixed impedance range	Test speed is the fastest.	Users need to participate in the range selection
Nominal Range	AT381x sets the optimum range depending on the nominal value.	The best way for sort test. Speed is the fastest.	Valid only in the sorting mode.

■ Available impedance range:

The instrument has 9 ranges, they includes: 10Ω, 30Ω, 100Ω, 300Ω, 1kΩ, 3kΩ, 10kΩ, 30kΩ, 100kΩ.

During the test, the instrument selects appropriate range according to impedance of the device under test.

Table 4-5 Range and corresponding test range

Range No.	Range Definition	Impedance Measuring Range
8	10Ω	0 ~ 10Ω
7	30Ω	10Ω ~ 100Ω
6	100Ω	100Ω ~ 316Ω
5	300Ω	316Ω ~ 1kΩ
4	1kΩ	1kΩ ~ 3.16kΩ
3	3kΩ	3.16kΩ ~ 10kΩ
2	10kΩ	10kΩ ~ 31.6kΩ
1	30kΩ	31.6kΩ ~ 100kΩ (∞)
0	100kΩ	100kΩ ~ ∞

Procedure for setting the impedance range [RANGE]

Step 1 Press [Meas] to enter Meas page;

Step 2 Press [Meas Display] key to switch to < Meas Display> page;

Step 3 Use the cursor keys to select [Range] field;

Step 4 Use the soft keys to select auto, manual or select range

Soft key	Function
AUTO RANGE	The instrument will automatically select the range
HOLD RANGE	The instrument is locked on the current range
NORMINAL RANGE	The instrument will select the best range based on the nominal value.
INCR +	Increase range number while the range is changed to be locked
DECR -	Decrement range number while the range is changed to be locked

Note: When range is automatic, the instrument will perform range prediction for each measurement cycle, so test speed will be slightly slower than hold range. Moreover, frequent changes in the range during automatic measurement can slow down the response. Usually, when instrument is used as a sorting measurement, auto range method is not suitable. For the sorting user, please select nominal range mode.

4.1.3 Test Frequency [FREQ]

AT3818: 10Hz ~ 300kHz continuous test frequency
AT3816A: 50Hz ~ 200kHz continuous test frequency
AT3816B: 50Hz ~ 200kHz 37 points
AT3817A: 50Hz ~ 100kHz continuous test frequency
AT3810A: 10Hz ~ 20kHz continuous test frequency
AT3817D: 50Hz ~ 100kHz, 10 points

Table 4-6 AT381x frequency resolution

Frequency range(F)	Resolution
10.0000Hz ≤ F ≤ 99.9999Hz	0.0001Hz
100.0000Hz ≤ F ≤ 999.999Hz	0.001Hz
1.00000kHz ≤ F ≤ 9.99999kHz	0.01Hz
10.0000kHz ≤ F ≤ 99.9999kHz	0.1Hz
100.000kHz ≤ F ≤ 300.000kHz	1Hz

Frequency accuracy: 0.01%

■ Procedure for setting the test frequency:

Step 1 Press [Meas] to enter Meas page;
Step 2 Press [Meas Display] key to switch to <Meas Display> page;
Step 3 Use cursor keys to select [Frequency] field;
Step 4 Users can:
Use soft keys to increase or decrease the frequency;
Enter data directly, soft key to input unit.

Soft key	Function
INCR +	Frequently used frequency list
DECR -	Frequently used frequency list

■ The most commonly used frequency list

Table 4-7 AT3818 the most commonly used frequency list

INCR +/ DECR -				
10Hz	50Hz	60Hz	100Hz	120Hz
1kHz	10kHz	20kHz	40kHz	50kHz
100kHz	200kHz	250kHz	300kHz	

Table 4-8 AT3816A/AT3816B List of the most common frequencies

INCR +/ DECR -				
10Hz	50Hz	60Hz	100Hz	120Hz
1kHz	10kHz	20kHz	40kHz	50kHz
100kHz	200kHz			

Table 4-9 AT3817A Frequency list

INCR +/ DECR -

10Hz	50Hz	60Hz	100Hz	120Hz
1kHz	10kHz	20kHz	40kHz	50kHz
100kHz				

Table 4-10 AT3810A List of the most common frequencies

INCR +/ DECR -				
10Hz	50Hz	60Hz	100Hz	120Hz
1kHz	10kHz	20kHz		

4.1.4 Trigger Mode [TRIG]

The instrument has 4 trigger modes:
Internal trigger, manual trigger, external trigger and remote trigger.

Trigger Mode	Description
INT	Also called continuous test, the trigger signal is continuously tested by the internal period of the instrument according to the inherent period.
MAN	Each time the [Trig] key is pressed, the instrument performs a measurement cycle, and the instrument is in a waiting state at other times.
EXT	A rising edge pulse is received from the rear panel Handler interface and the instrument performs a measurement cycle. At other times the instrument is in a waiting state. Please refer to the Handler interface
Remote	After receiving the RS232 trigger command, the instrument performs a measurement cycle, at other times the instrument is in a waiting state.

■ Procedure for setting the trigger mode:

Step 1 Press [Meas] to enter Meas page;
Step 2 Press [Meas Display] key to switch to < Meas Display> page;
Step 3 Use cursor keys to select [Trigger] field;
Step 4 Use the soft keys to select the trigger mode.

Soft key	Function
INT	Internal Trigger Mode
MAN	Manual Trigger Mode
EXT	External Trigger Mode
Remote	Remote Trigger Mode

4.1.5 Test Signal Voltage Level [LEVEL]

Test level of the instrument is set with the true rms value (RMS) of the sine wave signal. The frequency of the sine wave signal is the test frequency and is generated by the internal oscillator of the instrument.
The output impedance of the instrument source can be set to 30Ω, 50Ω or 100Ω. Usually an output impedance of 30Ω is suitable.
If users do not require a level, please specify a 1V level for testing.

The test voltage and test current of the instrument can be set according to the specifications. If the constant level function is turned on, "*" is added as the mark at the end of the level setting value.

■ Procedure for setting the test signal:

Step 1 Press [Meas] to enter Meas page;

Step 2 Press [Meas Display] key to switch to < Meas Display> page;

Step 3 Use the cursor keys to select [Level] field;

Step 4 Users can:

Use soft keys to increase or decrease the level

Input data directly, soft key to select voltage or current unit.

Soft key	Function
INCR +	The most commonly used level list
DECR -	The most commonly used level list
Constant level on	
Constant level off	

■ The most commonly used level list

Table 4-11 The most commonly used level list

INCR +/ DECR - (V)						
0.01	0.10	0.30	0.50	1.00	1.50	2.00
INCR +/ DECR - (A)						
0.0001	0.0005	0.001	0.005	0.01	0.02	

4.1.6 Measurement Speed [SPEED]

The instrument offers 3 test speeds (slow, medium and fast). The slower the test speed, the more accurate and stable the test results are.

■ Procedure for setting the test speed:

Step 1 Press [Meas] to the Meas page;

Step 2 Press [Meas Display] key to switch to < Meas Display> page;

Step 3 Use the cursor keys to select [Speed] field;

Step 4 Use soft keys to select

Soft key	Function
Slow	The measurement period is the longest, about 3 times / sec
Mediun	Moderate, about 10 times / sec
Fast	The fastest measurement, about 40 times / sec

Note:

1. Measurement speed is at 300kHz, typical value. The measurement speed refers to the time when Handler interface is triggered to the end of measurement (EOM) output.

Page: <bin number display>

Range: Hold range or nominal range

Average: 1

Bias: off

Automatic parameters: off

Monitor 1: Off

Monitor 2: Off

Constant level: off

(ms)	Test frequency (Hz)								
Speed	10	20	100	1k	2k	10k	100k	300k	DCR

SLOW	1600	800	483	342	336	332	332	332	333
MED	1600	800	160	94	91	88.5	88.5	88.5	171
FAST	1600	800	160	30	26.5	24.5	24.5	24.5	48

4.1.7 [Record] Data

The instrument can record 10,000 sets of test data through the internal data buffer. These data are saved in an external USB disk in (.csv) file format. These files can be opened on a PC using a Windows Excel.

■ Procedure for setting recording data:

Step 1 Press [Meas] to enter Meas page;

Step 2 Press [Meas Display] key to switch to < Meas Display> page;

Step 3 Use the cursor keys to select [Record] field;

Step 4 The option before recording is not enabled:

Soft key	Function
Start recording	Start a new measurement data record

Step 5 Press [Start Recording] soft key to start recording data to internal buffer of the instrument.

Options after the start of recording

Soft key	Function
Save and stop	The current record is stopped and the data is saved to a USB disk file
Stop and clear buffer	The current record is stopped, the buffer is cleared, but the data is not saved to the USB disk.

Step 6 If press the soft key [Save and Stop] or [Stop and Clear Buffer], the current recording is terminated.

Or wait for the buffer to be full, press [Buffer Full] button to save data to the USB disk.

Soft key	Function
Buffer full, please save	Save data to a USB disk file
Clear buffer	The buffer is cleared and the current data is invalid.

Note:

- Before using the saved data, insert the USB disk on the interface of front panel.
- The saved file is in the DATA subfolder in the same folder as the USB disk. The file name is: 001.CSV For example: F:\AT3818\DATA\001.CSV
- Up to 1000 files can be saved (from 001.CSV to 999.CSV)
- The buffer size can be modified in the [Data Buffer] field on the [System] page. (maximum 10000 data)

4.1.8 <Meas Display> Page Information Bar

Below the instrument test results, the instrument gives some information related to measurement, which is modified in [Setup] main page. Used here as a reference.

In addition to this, instrument also display the comparator results in the information bar.

Correction information is displayed in the information bar too.

The status information bar also includes a line of help information. When using cursor keys to make a selection, the help information will be prompted.

4.2 <BIN No. DISPLAY> Page

Press [Meas] key and use soft key to enter the [BIN No. DISPLAY] page.

Figure 4-2 <BIN No. DISPLAY> page



Setting Bar: The setting area of bin number display page is roughly same as the [Meas Display] page. These settings include the following 8 items:

- Function
- Range
- Frequency
- Trigger
- Level
- Speed
- Comparator
- Auxiliary bin

Comparator results are displayed here using large characters, primary and secondary test results are displayed in this area as small characters.

In the lower half of the screen, some settings related to comparator are displayed in this area.

4.2.1 [Comparator] Function ON/Off

The built-in comparator can sort devices into 9 sets of primary parameters and 1 set of secondary parameters, and classify them into up to 10 kinds of bins (BIN 1~BIN 9 and OUT OF BIN). In addition, a device which primary parameter is within limits, but secondary parameter is not, can be sorted into an auxiliary BIN (AUX).

The comparator is allowed to be turned off.

■ Comparator Workflow:

Figure 4-3 Comparator Workflow

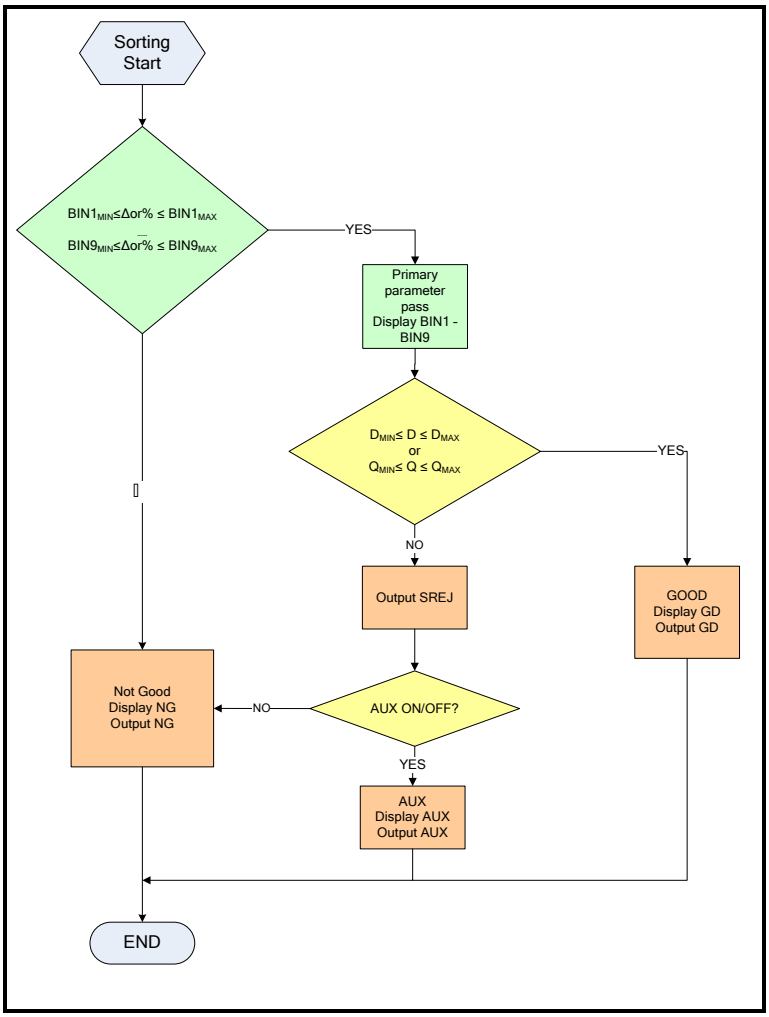

■ Procedure for setting the comparator function [COMP]

Step 1 Press the [Meas] key

Step 2 Press the <MEAS DISPLAY> soft key

Step 3 Use the cursor key to select [COMP] field

Step 4 Use the soft keys to turn on/off the comparator

Soft key	Function
OFF	The comparator is turned off and the measurement bar is displayed OFF
ON	The comparator is turned on and the measurement bar shows sorting result of the current measurement.

4.2.2 Auxiliary Bin [AUX] ON/OFF

If users does not need to sort secondary parameters, the auxiliary bin (AUX) can be turned off. After turn off, the secondary parameter limit will not be determined during the measurement.

■ Procedure for turning on/off auxiliary bin:

Step 1. Press the [Meas] key

Step 2. Press the <MEAS DISPLAY> soft key

Step 3. Use the cursor key to select [AUX] field

Step 4. Use the soft keys to turn on/off the auxiliary bin

Soft key	Function
OFF	Auxiliary bin if turned off
ON	Auxiliary bin if turned on

4.2.3 Information Bar of [Bin No. Display]

The information bar shows the settings associated with the comparator, including nominal value, comparator mode, secondary parameter limit value, and the limit range for bin 1.
At the same time, correction information is also displayed in the information bar too.

4.3 <BIN COUNT DISPLAY> Page

When press [Meas] key and [BIN COUNT] soft key, the <BIN COUNT DISPLAY > page appears.

Figure 4-4 <BIN COUNT DISPLAY > page



The <BIN COUNT DISPLAY> page will display the count result of the comparator.
Settings bar:

- Bin count

Information Bar:
The following count values are monitored in the information bar:

- Bin1~Bin9 count value
- 2nd secondary parameter failure number [AUX]
- Unqualified number [OUT]

If the condition is set, it needs to be modified in <COMP Setup> page in the [Setup] main page.

4.3.1 Counter Function [COUNT]

The instrument counts to the bin pass or fail, the maximum count is 999999, the counting operation stops and the overflow message "------" appears when this value is reached.

■ **Set the Counter:**

Step 1. Press the [Meas] key
Step 2. Press the <MEAS DISPLAY> soft key
Step 3. Use the cursor key to select [COUNT] field
Step 4. Use the soft keys to set counter function

Soft key	Function
COUNT ON	
COUNT OFF	
-	
-	
Bin count reset	All counts are reset to 0

4.4 <LIST SWEEP DISPLAY> Page

The <LIST SWEEP DISPLAY> page will display when you press the [Meas] key and [LIST SWEEP] soft key.

Figure 4-5 <LIST SWEEP DISPLAY> page



<List Sweep Display> cycle sweeps 10 groups of frequencies or levels and compare them with the set values to get the comparison result.

On <List Sweep Display> page, the instrument scans according to the trigger mode.

During a sweep, an asterisk mark (*) will appear on the left side of the sweep point currently being measured and the measurement will be highlighted.

Under this page, users can make the following settings:

- Trigger - Trigger mode
- Method - Sweeping method
- Range - Test range
- Record - data record

4.4.1 Sweep Trigger Mode [TRIG]

The instrument sweeps according to the trigger mode. The trigger mode usually uses manual triggering. Therefore, when entering the page, trigger mode is set to manual by default, and it is automatically sweeped once.

Table 4-12 Sweep trigger mode

Trig Mode	Function
INT	Internal Trigger. All ten sweep points are swept continuous.
MAN	Manual Trigger. Each time the instrument is triggered by [Trig] key, the sweep points are swept one by one.
EXT	External Trigger. Each time the instrument is triggered by the handler trigger pin, the sweep points are swept one by one.
Remote	Remote trigger, the instrument receives a trigger command from the RS232 interface to scan a test point.

Figure 4-6 Sweep Mode

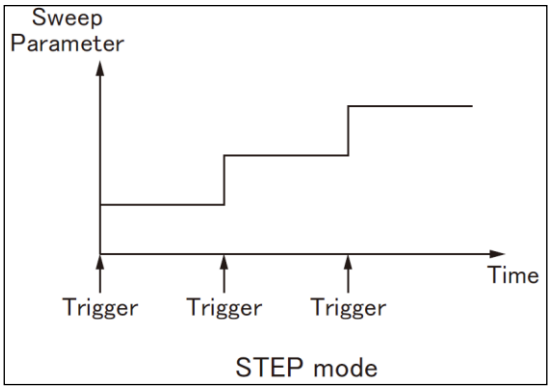

4.4.2 Sweep [Method] Setting

The <List Sweep Display> page completes the scan frequency or level value test of up to 10 list points.

When the test [Method] is set to sequence and [Trigger] is set to manual, the sweep function will automatically execute each test step on the list in sequence until the last step. Users will wait for the trigger button to be pressed.

When the test [Method] is set to single step and [Trigger] is set to manual, the sweep function will automatically execute the first test step, then stop and wait for the trigger button to execute the next step.

The instrument sweeps according to the trigger mode. The trigger mode usually uses manual triggering. Therefore, when entering the page, the trigger mode is set to manual by default, and it is automatically sweeped once.

Table 4-13 sweep method

Soft key	Function
Sequence	Trigger will scan all test points at a time.
Manual	Trigger only scans one test point at a time.

4.5 <<Measure Full Screen Display> Page

The full screen display only shows primary and secondary parameters, monitor parameters, and comparator results.

Figure 4-7 <Measure Full Screen Display> Page



- To enter Measure Full Screen Display page:

Step 1 Press the [Meas] key;

Step 2 Press the bottom soft key [Full Screen] to switch to <Measure Full Screen Display>

5.[Setup] Key

In this chapter users will learn about all the setup features:

- Meas Setup page
- • Calibration page
- • Comparator setup page
- • List setup page

Every time or everywhere you can press the [Setup] key to open the <MEAS SETUP> page.

5.1 <MEAS SETUP> Page

All measurement related settings are operated in the <MEAS SETUP> page.

In <MEAS SETUP> page, the Instrument does not display test result and sorting result, but testing still in progress.

These settings include the following parameters:

- Function – Measurement function
- Range – impedance range
- Frequency – test frequency
- Trigger – trigger mode
- Level – test level
- Speed – test speed
- Source Output Impedance – signal source output impedance
- Average – average number of times
- Bias – DC voltage bias
- Monitor 1 – Monitor parameter 1
- Automatic Parameters – automatic LCZ selection
- Monitor 2 – Monitor parameters 2
- Delay – test delay timer
- Constant Level – constant test level

NOTE: Some settings can be set in <MEAS DISPLAY> page and <BIN No. DISPLAY> page. Please refer Sector 4.1<MEAS DISPLAY> Page to set.

Figure 5-1 <MEAS SETUP> Page



5.1.1 Source Output Impedance [SRC RES]

The source internal resistance is also called the output impedance.

The Source output impedance can be set to 30Ω, 50Ω or 100Ω.

After the test level Vs is set, the test current is flowing through the device under test (DUT) will be determined by the impedance Zx=Rx+jXx of the DUT and the source internal resistance Rs, namely:

$$Is = \frac{Vs}{|Rs + Rx + jXx|}$$

Since some measured components such as high-permeability magnetic core inductors will vary in the magnitude of the test current, that is, they have current sensitivity, different internal resistances will inevitably lead to measurement results at the same test level. Output internal resistance selectable function is to facilitate get relatively consistent measurement results for current sensitive devices. The instrument uses two low source output internal resistances, with a default value of 100Ω..

The internal resistance of KEYSIGHT's LCR meter (eg E4980A) is 100Ω. Users who need to compare with such instruments need to change the internal resistance of the instrument to obtain data uniformity.

For non-current sensitive, especially low impedance test objects, we recommend using 30Ω source internal resistance.

■ Procedure for setting source output impedance:

Step 1. Press the [Setup] key

Step 2. Use the cursor key to select [SRC RES] field

Step 3. Use the soft keys to set source output impedance

Soft key	Function
30Ω	30Ω source output impedance, if there is no requirement for source output impedance, it is recommended to use 30Ω.
50Ω	50Ω source output impedance
100Ω	100Ω source output impedance

5.1.2 Averaging Factor [AVG]

Taking "average" is the most common type of digital filter, the "number" is the depth of the filter. The purpose is to perform multiple measurements and take the average result as the final display value, which can improve the stability and reliability of the measurement results. You can specify the averaging factor from integer 1 to integer 256.

■ To set up the averaging factor:

Step 1. Press the [Setup] key

Step 2. Use the cursor key to select [AVG] field

Step 3. Use the soft keys or number keys to enter averaging factor.

Soft key	Function
INCR +	Increments the averaging factor in steps of 1, 2, 4, 8, 16, 32, 64, 128 and 256.
DECR -	Decrements the averaging factor in steps of 1, 2, 4, 8, 16, 32, 64, 128 and 256.

5.1.3 DC Bias Voltage

The instrument has built-in -2.5V~2.5V DC bias.

This feature can superimposes a DC bias voltage on the AC signal.

■ Procedure for setting DC Bias Voltage:

Step 1. Press the [Setup] key

Step 2. Use the cursor key to select [BIAS] field

Step 3. Use the soft keys to select DC bias voltage.

Soft key	Function
OFF	DC Bias Voltage is turned off
2V	Signal source superimposed 2V DC bias
1.5V	Signal source superimposed 1.5V DC bias
-1.5V	Signal source superimposed -1.5V DC bias
-2V	Signal source superimposed -2V DC bias

5.1.4 Auto LCZ Function [AUTO LCZ]

Auto LCZ Function can help you to select a proper measurement parameter, the best equivalent circuit mode, if range is set to AUTO range, the instrument is completely in the smart test state.

■ To set up the Auto LCZ Function:

Step 1. Press the [Setup] key

Step 2. Use the cursor key to select [AUTO LCZ] field

Step 3. Use the soft keys to turn on/off the Auto LCZ Function.

Soft key	Function
OFF	Turn off the Auto LCZ Function
ON	Turn on the Auto LCZ Function. When Auto LCZ Function is set to ON, "AUTO-LCZ" will display on [FUNC] field.

NOTE The Auto LCZ Function will be turned off after users reset the measurement function.

5.1.5 Monitor 1 and Monitor 2 [MON 1][MON 2] Parameter Selection

The AT381x can monitor the other two parameters.

NOTE
Additional monitoring parameters do not increase instrument processing time.
The instrument defaults to "Off".
The monitoring parameters are only displayed on the [Meas Display] page.
See Table 4-3 for nouns explanation of the monitoring parameters.

■ Procedure for setting monitor parameters (monitor 1 and monitor 2 same procedure)

Step 1. Press the [Setup] key

Step 2. Use the cursor key to select [MON 1] or [MON 2] field

Step 3. Use the soft keys to select [MON 1] or [MON 2]

Soft key	Function
OFF	Turn off the monitor
Z	Absolute value of impedance
D	Dissipation factor
Q	Quality factor(=1/D)
Vac	Test signal Voltage
Iac	Test signal Current
Δ	Absolute deviation value
Δ%	Relative deviation value
θr	Phase angle (radian)
θd	Phase angle
R	Resistance (=Rs)
X	Reactance
G	Conductance
Y	Admittance

5.1.6 Measurement [Delay]

The instrument can set the delay time before each test by testing [Delay] timer, and wait for the station to be ready before testing.
The maximum delay time is 60s, the minimum delay time is 1ms.

5.1.7 [Constant Level] Function

The constant level function adjusts the voltage and current across the DUT to match the preset voltage and current values. A constant level will be obtained on the device under test without being affected by source internal resistance.

■ Procedure for setting constant level:

Step 1. Press the [Setup] key

Step 2. Use the cursor key to select [Constant Level] field

Step 3. Use the soft keys to set constant level

Soft key	Function
OFF	Turn off the constant level function.
ON	Turn on the constant level function.

NOTE When the constant level is turned on, "*" is added at the end of the level setting value, indicating that the constant level function is turned on.

5.1.8 [Nominal Value] Setting

For the convenience of setting, when the [Monitor 1] or [Monitor 2] function is set to Δ or Δ%, the nominal value field is displayed on <Setup> page.
This standard value is synchronized with the standard value save of <COMP Setup> page.

5.2 <CORRECTION> Page

When you press [Setup] key and [CORRECTION] soft key, the <CORRECTION> page appears.

In this page, the OPEN/SHORT/LOAD correction for correcting the stray admittance and residual impedances can be performed.

NOTE

In order to achieve the accuracy specified by the technical specifications, open circuit clear zero and short circuit clear zero are necessary.
Load calibration refers to the linear correction of the instrument using a known standard, which is usually not required by user.
If replace test fixture or test cable, please re-perform open and short-circuit clear zero.
When the temperature changes dramatically, please perform open circuit and short circuit clear zero in time.
Small range greatly rely on open-circuit clear zero, large range greatly rely on short-circuit clear zero.

The correction function has two kinds of correction methods:

- Calibration based on all frequency points. This calibration provides full open and short circuit correction for all frequency points in the entire frequency range.
- Based on the calibration of specified frequency point, it supports open circuit correction, short circuit correction and load calibration for 3 user point frequencies.

In <CORRECTION> page, you can configure each of the following controls with the cursor placed in the corresponding field:

- [Open circuit] correction– including full frequency point open circuit correction
- [Short circuit] correction– including full frequency point short circuit correction
- [Frequency 1] correction– including open circuit and short circuit correction
- [Frequency 2] correction– including open circuit and short circuit correction
- [Frequency 3] correction– including open circuit and short circuit correction

Figure 5-2 <CORRECTION> Page

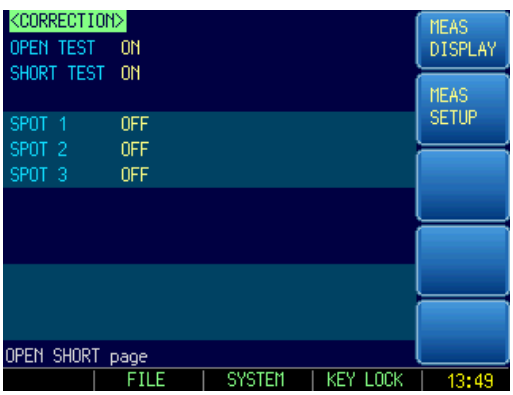

5.2.1 Open Correction [OPEN]

The instrument open circuit calibration function compensates for any stray admittance (G, B) that may exist between the calibration surface determined by the length of the test cable and the connection point of the device under test.

Figure 5-3 Stray Admittance

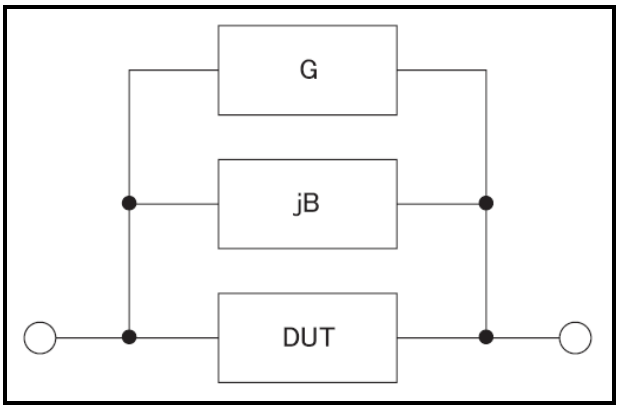

[Open] correction will completely correct the typical frequency of the instrument. These frequency points vary depending on the instrument version:

For these typical frequencies, please refer to the test frequency "List of frequently used frequencies".

■ **To perform open correction**

Step 1 Press the [Setup] key, then press [Correction]

Step 2 Press the [CORRECTION] soft key.

Step 3 Use the cursor key to select [OPEN] field

Soft key	Function
ON	Enables open correction.
OFF	Disables open correction. The clear value does not participate in the measurement operation.
Open correction for all frequencies	Perform open correction for full frequency

Step 4 Press [MEAS OPEN] soft key, a dialog message display "Connect the UNKNOWN terminal without DUT".

Step 5 Please Connect the UNKNOW terminal and test fixture without DUT connected.

Step 6 After pressing [OK], the instrument starts to perform correction.

When correcting, there will be a progress bar prompt at the bottom of the page, and the "Trig' d" indicator will flash.

After the correction is completed, the progress bar disappears and the help prompt shows "correction completed."

During correction, users can cancel the correction at any time by pressing the [Abort] button.

Step 7 Press [Open] to enable the open circuit correction.

5.2.2 Short Correction [SHORT]

The short correction feature of the AT381x compensates for any residual impedances (R,X) that may exist within the interval from the calibration plane, which is determined by the selected cable length, to the DUT connecting points. (see Figure 5 4)

Figure 5-4 Residual Impedances

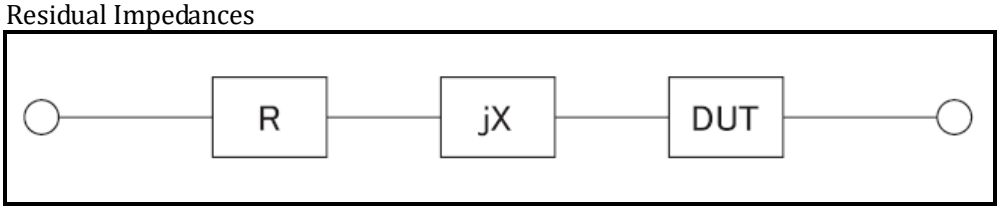

■ **To perform short correction:**

Step 1 Press the [Setup] key, then press [Correction]

Step 2 Press the [CORRECTION] soft key.

Step 3 Use the cursor key to select [SHORT] field

Soft key	Function
ON	Enables short correction.
OFF	Disables short correction. The clear value does not participate in the measurement operation.
Short correction for all frequencies	Perform short correction for full frequency

Step 4 Press [MEAS SHORT] soft key, a dialog message display "Short-circuit the test terminals".

Step 5 Short-circuit the test fixture with a shorting piece, or clamp the test cable together, do not place any tested parts, and do not touch anything.

Step 6 After pressing [OK], the instrument starts to perform correction.

When correcting, there will be a progress bar prompt at the bottom of the page, and the "Trig' d" indicator will flash.

After the correction is completed, the progress bar disappears and the help prompt shows "correction completed."

During correction, users can cancel the correction at any time by pressing the [Abort] button.

Step 7 Press [Open] to enable the short circuit correction.

5.2.3 Frequency 1, 2, 3 Correction [FREQ 1] [FREQ 2] [FREQ3]

Correction based on specified frequency points involves performing open/short/load correction at user-specified frequency points. There are 3 frequency points you can specify.

In addition to the open/short correction features, AT381x provides a LOAD correction feature that allows you to carry out, at your specified frequency points, load correction using a transfer function determined based on the relationships between a particular standard' s reference values (known values) and the standard' s actual measurements. With load correction, you can compensate for errors that cannot be compensated using open/short correction.

Users can perform open/short/load correction at the specified frequency point. Please enter A and B fields to specify the etalon value.

■ **To specify frequency points and perform open correction**

Step 1 Press the [Setup] key, then press [Correction]

Step 2 Use the cursor key to select [FREQ 1] [FREQ 2] [FREQ3] field

Step 3 Use the soft keys to select or directly enter the frequency value, frequency that is not within the instrument's characteristic frequency will be approximated to the characteristic frequency.

If the current frequency point is is turned off before:

Soft key	Function
ON	Enable this frequency correction point
Current frequency	Specify the frequency being used as the current frequency point value

If the current frequency point is is turned on before:

Soft key	Function
OFF	Disable this frequency correction point
Current frequency	Specify the frequency being used as the current frequency point value
Open correction	Individually perform open correction for this set frequency

Short correction	Individually perform short correction for this set frequency
Load correction	Perform load correction for this set frequency

Step 4 Press [MEAS OPEN] soft key, a dialog message display "Connect the UNKNOWN terminal without DUT".

Step 5 Please Connect the UNKNOW terminal and test fixture without DUT connected.

Step 6 After pressing [OK], the instrument starts to perform correction.

When correcting, there will be a progress bar prompt at the bottom of the page, and the "Trig' d" indicator will flash.

After the correction is completed, the progress bar disappears and the help prompt shows "correction completed."

During correction, users can cancel the correction at any time by pressing the [Abort] button.

■ **To specify frequency points and perform short correction**

Step 1 Press the [Setup] key, then press [Correction]

Step 2 Use the cursor key to select [FREQ 1] [FREQ 2] [FREQ3] field

Step 3 Use the soft keys to select or directly enter the frequency value, frequency that is not within the instrument's characteristic frequency will be approximated to the characteristic frequency.

If the current frequency point is is turned off before:

Soft key	Function
ON	Enable this frequency correction point
Current frequency	Specify the frequency being used as the current frequency point value

If the current frequency point is is turned on before:

Soft key	Function
OFF	Disable this frequency correction point
Current frequency	Specify the frequency being used as the current frequency point value
Open correction	Individually perform open correction for this set frequency
Short correction	Individually perform short correction for this set frequency
Load correction	Perform load correction for this set frequency

Step 4 Press [MEAS SHORT] soft key, a dialog message display "Short-circuit the test terminals".

Step 5 Short-circuit the test fixture with a shorting piece, or clamp the test cable together, do not place any tested parts, and do not touch anything.

Step 6 After pressing [OK], the instrument starts to perform correction.

When correcting, there will be a progress bar prompt at the bottom of the page, and the "Trig' d" indicator will flash.

After the correction is completed, the progress bar disappears and the help prompt shows "correction completed."

During correction, users can cancel the correction at any time by pressing the [Abort] button.

■ **To specify frequency points and perform load correction**

Step 1 Press the [Setup] key, then press [Correction]

Step 2 Use the cursor key to select [FREQ 1] [FREQ 2] [FREQ3] field

Step 3 Use the soft keys to select or directly enter the frequency value, frequency that is not within the instrument's characteristic frequency will be approximated to the characteristic frequency.

Step 4 Use the cursor keys to select [Standard A], enter the value of the current standard. The value entered should be the primary parameter value indicated by the [Function] field.

For example, if the current [Function] is Cs-D, please enter a known Cs value for [Standard A].

Step 5 Move the cursor keys to select [Standard B], enter the secondary parameter value of the standard.

For example, if the current [Function] is Cs-D, enter a known D value for [Standard B].

Step 6 Connect the standard to the terminal under test.

Step 4 Move the cursor key to this frequency

Soft key	Function
OFF	Disable this frequency correction point
Current frequency	Specify the frequency being used as the current frequency point value
Open correction	Individually perform open correction for this set frequency
Short correction	Individually perform short correction for this set frequency
Load correction	Perform load correction for this set frequency

Step 8 After pressing [Load Correction], the instrument starts to perform correction.

When correcting, there will be a progress bar prompt at the bottom of the page, and the "Trig' d" indicator will flash.

After the correction is completed, the progress bar disappears and the help prompt shows "correction completed. At the same time, the current test results are displayed in [Measure A] and [Measure B] fields. This result will be used to calculate the load scale value.

During correction, users can cancel the correction at any time by pressing the [Abort] button.

5.3 Comparator Setup

Press [Setup] key and press [COMP setup] soft key to open <COMP setup> page.

This page allows you to configure the AT381x' s built-in comparator.

AT381x' s built-in comparator can sort DUTs into a maximum 11 levels (BIN1 through BIN9, AUX and OUT) using up to nine sets of primary parameter limits along with one set of secondary parameter limits.

In addition, the comparator has a bin count function that counts up to 999,999 DUTs.

To take full advantage of the comparator, AT381x was equipped a handler interface for use in conjunction with the comparator, all of these bins signal can output to yours PLC via the handler interface.

In the <COMP Setup> page, you can configure each of the following controls with the cursor placed in the corresponding field.

- 【Function】 - Select to set the primary and secondary parameters
- Comparator ON/OFF
- Input【Nominal】value–The nominal value is related to the test [function]
- Beep feature
- Compare【Mode】- Absolute value comparison, percentage comparison or direct reading comparison
- Auxiliary bin ON/OFF
- 【Open】function – Whether to detect open at measured terminal.
- Number of PASS bin
- Input the [upper limit] and [lower limit] data for each bin.

Figure 5-5 < COMP Setup > page



5.3.1 【Function】 Setup

The instrument can be independently set up for all test functions and stored in internal memory space.

Before setting the comparator parameters, select the consistent test [Function] according to the parameters set in the Meas page.

5.3.2 Comparator Function ON/OFF

AT381x' s built-in comparator can sort devices into a maximum of 10 bins (BIN1 to BIN9 and OUT OF BIN) using a maximum of nine pairs of primary parameter limits and one pair of secondary parameter limits. In addition, a device which primary parameter is within limits, but secondary parameter is not, can be sorted into an auxiliary BIN (AUX).

The comparator is allowed to be turned off.

■ Procedure for turning on/off the comparator function [COMP]:

Step 1. Press the [Setup] key

Step 2. Press the [COMP Setup] soft key

Step 3. Use the cursor key to select [COMP] field

Step 4. Use the soft keys to turn on/off the comparator.

Soft key	Function
OFF	The comparator is turned off and the measurement bar is displayed OFF
ON	The comparator is turned on and the measurement bar shows the sorting result of the current measurement.

NOTE The comparator is turned off and the bin count is stopped, regardless of whether the bin count is on or off.

5.3.3 Compare【Mode】

The compare mode is only for the primary parameters.

There are three compare modes for the built-in comparators:

- Absolute value Δ
- Relative value Δ%
- Direct reading value SEQ
- Absolute value Δ and relative value Δ% mode:

Absolute value Δ and relative value Δ% mode is called tolerance mode. Its principle is as follows:

Figure 5-6 Tolerance mode

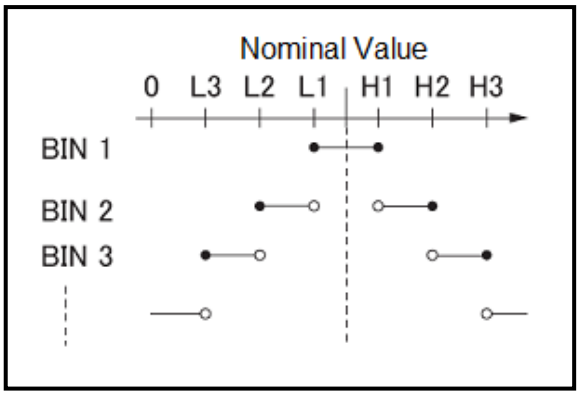

Among them:

Nominal value: The tolerance mode requires input of the nominal value.

- ● Includes this point
- ○ Excludes this point

Absolute value Δ = measured value – nominal value

Percent Δ% = (measured value - nominal value) / nominal value × 100%

Figrue 5-7 Example of sorting in tolerance mode

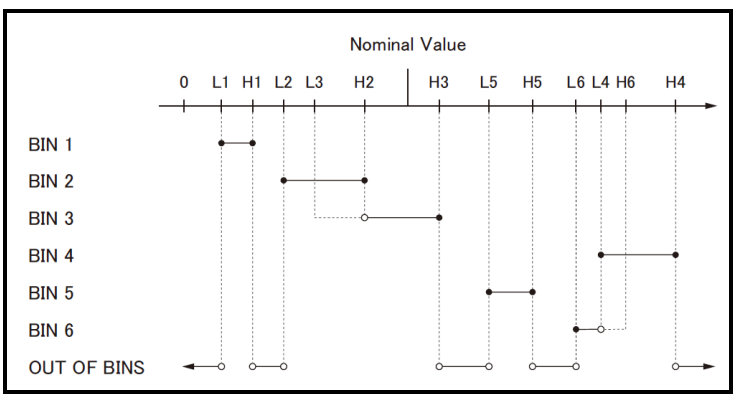

- ● Includes this point
- ○ Excludes this point

■ Sequential mode:

Figure 5-8 sequential mode:

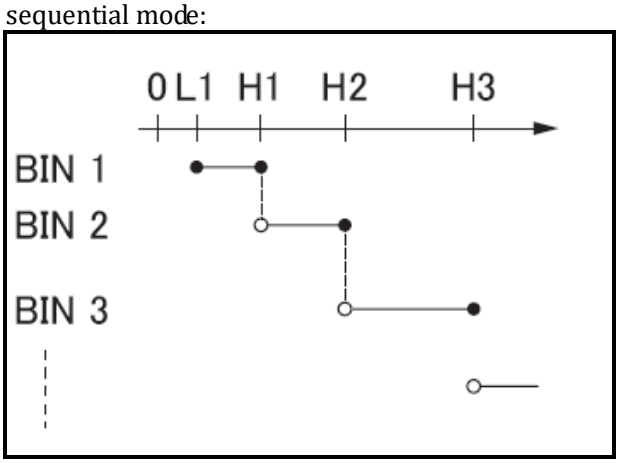

- ● Includes this point
- ○ Excludes this point

In sequential mode, the comparison uses the direct reading measurement value to compare with the upper and lower limit ranges of the bin. The nominal value does not need to participate in operation.

■ **To set up the comparator limit mode:**

Step 1 Enter the [COMP Setup] key

Step 2 Use the cursor key to select [MODE] field

Step 3 Use the soft keys to select comparator mode

Soft key	Function
ABS	Absolute parameter values
PER	Deviation percentages.
SEQ	Sequential mode.

5.3.4 Nominal Value for Tolerance Mode

You must configure the nominal value when you use tolerance mode as the limit mode for the primary parameter.

In sequential mode the nominal value does not affect sorting. In sequential mode you can configure nominal value or not.

NOTE

When using negative nominal values, be sure to set the lower limit to a value higher than the upper limit because when they are converted to absolute values, the lower limit becomes higher than the upper limit.

The nominal value entered corresponds to the primary parameter of the test [Function].

■ **To enter the nominal value:**

Step 1 Enter the [COMP Setup] key

Step 2 Use the cursor key to select [MODE] field

Step 3 Use the numeric keys to enter data, the unit is selected by using soft keys.

5.3.5 [Auxiliary] Bin ON/OFF

If the user does not need to sort the secondary parameters, the auxiliary bin (AUX) can be turned off.

After shutting it down, the secondary parameter limit will not be determined during the measurement.

■ **To turn on/off auxiliary bin:**

Step 1 Enter the [COMP Setup] key

Step 2 Use the cursor key to select [Auxiliary] field

Step 3 Use the soft keys to turn on/off auxiliary bin

Soft key	Function
OFF	Auxiliary bin is off
ON	Auxiliary bin is on

5.3.6 【Beep】Feature

The beep feature allows for a GD beep, NG beep, or beep OFF

■ **To set up the beep feature**

Step 1 Enter the [COMP Setup] key

Step 2 Use the cursor key to select [Beep] field

Step 3 Use the soft keys to set up beep feature

Soft key	Function

OFF	Beep is off
GD	Beep when the comparator sorting result is GD
NG	Beep when the comparator sorting result is NG

5.3.7 Total Number of Bins [#-BINS]

AT381x specify nine bins (1-BINS to 9-BINS). Please set number of bins according to your own requirements and close the extra bins.

Step 1 Enter the [COMP Setup] key

Step 2 Use the cursor key to select [#-BIN] field

Step 3 Use the soft keys to set up total number of bins

Soft key	Function
Total 1 bin	Only 1 bin for GD bin
……	
Total 9 bins	Turn on all 9 GD bins

5.3.8 Lower and Upper Limits Setup

AT381x' s built-in comparator can sort DUTs into a maximum 10 levels using up to nine sets of primary parameter limits alone with one set of secondary parameter limits.

Please enter the absolute value of the primary parameter for the "absolute value Δ" comparison mode, the unit is the primary parameter unit.

Please enter the relative value of the primary parameter for the "relative value Δ%" comparison mode, the unit is %.

Please enter the sequential mode of the primary parameter for the sequential value SEQ comparison mode, the unit is the primary parameter unit.

The upper and lower limits of the secondary parameters are always sequential g values, regardless of the comparison mode.

■ Enter the limit value by using the entry keys.

Step 1 Enter the [COMP Setup] key

Step 2 Use the cursor key to select 【1】 [LOW] field;

Step 3 Input data

Relative value Δ% mode does not need to select unit magnification, please enter a percentage value.

Absolute value Δ and sequential value SEQ mode use the soft keys to select the unit.

Step 4 Use the cursor key to select 【1】 [HIGH] field;

Step 5 Input data

Step 6 Repeat 2~5 time to complete the data input of other bins.

NOTE

The instrument prepares independent storage space for the three comparison modes, so the comparator data in each comparison mode is independent of each other.

In order to be able to sort properly, increase the Bin1 to Bin9 intervals in the tolerance mode. Please increase the Bin1 to Bin9 data range in sequential mode.

After all settings are completed, if you want to use it for a long time, please enter the [File] page to save the data in the file.

The instrument does not judge whether the data input by users is reasonable. For example, the lower limit is higher than the upper limit, or the bin between bin is

overlapped. Please check the setting result carefully to prevent the sorting error.

5.4 <LIST SWEEP SETUP> Page

Press the [Setup] key and press [LIST SETUP] soft key to open the <LIST SWEEP SETUP> page. The list sweep feature of AT381x can perform automatic or manual sweep measurement by sweeping the frequency, signal level through a maximum 10 groups of frequencies or levels. Before using list sweep feature, you have to configure the sweep list.

In the <LIST SWEEP SETUP> page, you can configure each of the following list sweep measurement controls with the cursor placed in the corresponding field:

- Sweep trigger mode [TRIG]
- Sweep parameter selection [FREQ[Hz], LEVEL[V]]
- Sweeping point setup
- Limit parameter ([CMP]) selection (primary parameter [A], secondary parameter [B], no comparison [-])
- Input lower and upper limits [LOW] [HIGH]

Fiture 5-9 <LIST SWEEP SETUP> Page



5.4.1 Sweep Trigger Mode [TRIG]

The AT381x sweeps according to the trigger mode.

Table 5-1 Sweep trigger mode description

Trig Mode	Function
INT	Internal Trigger. All ten sweep points are swept continuous.
MAN	Manual Trigger. Each time the instrument is triggered by [Trig] key, the sweep points are swept one by one.
EXT	External Trigger. Each time the instrument is triggered by the handler trigger pin, the sweep points are swept one by one.
BUS	BUS Trigger. Each time the instrument is triggered by SCPI command, the sweep points are swept one by one.

Figure 5-10 Sweep Mode

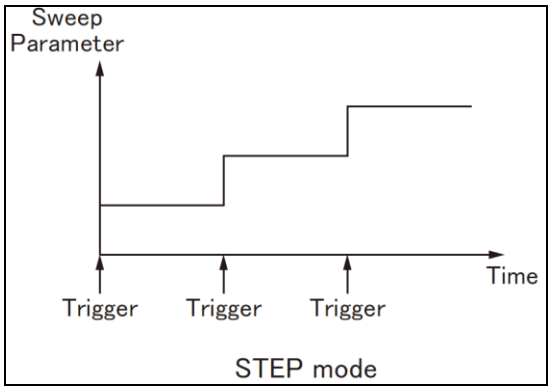

5.4.2 List Sweep Parameters Setup

The sweep parameter used in list sweep measurement can be measurement frequency and signal level. Use the sweep point field to specify the list sweep measurement parameter.

■ To select the list sweep measurement parameter

Step 1 Enter the [LIST SETUP] soft key

Step 2 Use the cursor key to select FREQ[Hz] or LEVEL[V] field;

Step 3 Use the soft keys to select list sweep parameter.

Soft key	Function
FREQ[Hz]	Uses frequency as the list sweep parameter
LEVEL[V]	Uses voltage as the list sweep parameter

5.4.3 Configure the Sweep Points

AT381x' s List sweep measurement feature supports up to 10 sweep points as well as measurement limit values. Each of sweep point can be turned on or off.

To configure the sweep points

Step 1 Enter the [LIST SETUP] soft key

Step 2 Use the cursor key to select any sweep point from 1~9;

Step 3 Turn sweep points on or off or enter sweep point data (frequency or level)

Soft key	Function
ON	Turn on current point
OFF	Turn off current point

5.4.4 Limit parameters [CMP] selection

AT381x can compare the primary parameter or the secondary parameter limit while sweeping, and draw a GD or NG conclusion.

■ Procedures for setting【CMP】

Step 1 Enter the [LIST SETUP] soft key

Step 2 Use the cursor key to select【CMP】of any sweep point from 1~9; Note that the current sweep point needs to be turned on.

Step 3 Use the soft keys to select

Soft key	Function
Primary parameter A	Uses the primary parameter as the comparison parameter
Secondary parameter B	Uses secondary parameter as comparison parameter

Not compare	Do not compare

5.4.5 Input [Lower] and [Upper] Limits Value

Each sweeping point has a set of upper and lower limits, which may be a sequential range of the primary parameter A or the secondary parameter B.

NOTE

The primary parameter A and secondary parameter B multiplex the same storage space to store upper and lower limits.

■ Procedures for setting [Lower] and [Upper] Limits:

Step 1 Enter the [LIST SETUP] soft key

Step 2 Use the cursor key to select [Lower] and [Upper] Limits of any sweep point from 1~9; Note that the current sweep point needs to be turned on.

Step 3 Use the soft keys to select the unit

NOTE

The instrument prepares separate memory for the sweep parameters, so the sweep list data for frequency and level are independent of each other.
After all settings are completed, if you want to use it for a long time, please enter the [File] page to save the data in the file.

6.System Configurations

This section includes the following information:

- SYSTEM CONFIG page
- SYSTEM INFO page
- SYSTEM SERVICE page

When press the [Meas] or [Setup] key followed by [SYSTEM] bottom soft key, the <SYSTEM CONFIG> page appears.

6.1 <SYSTEM CONFIG> Page

Under the [Meas] or [Setup] page, press [System] to enter the <System Config> page. Following information can be configured in the <SYSTEM CONFIG> page.

- [LANGUAGE]
- System date and time configuration [DATE/TIME]
- Account settings [ACCOUNT]
- Beep tone [TONE]
- Beep setting [BEEP]
- RS-232 Baud rate setting [BAUD]
- Data Cache – Set the maximum cache value for the data logging function

All settings in <SYSTEM CONFIG> page will be automatically saved in the system and will be automatically loaded next time when AT381x is turned on.

Figure 6-1 <SYSTEM CONFIG> Page

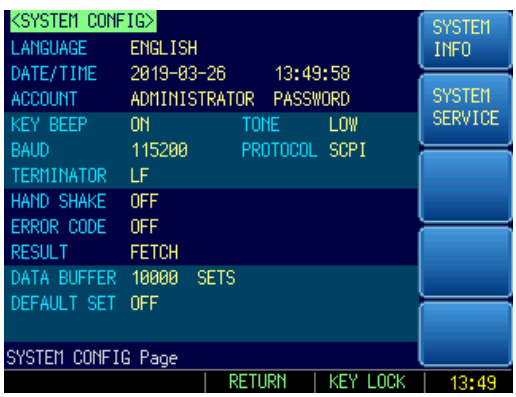

6.1.1 System Language [LANGUAGE]

Two languages (ENGLISH and CHINESE) were supported by AT381x.

■ To change languages

Step 1 Enter <SYSTEM CONFIG> page

Step 2 Use the cursor key to select [LANGUAGE] field

Step 3 Use the soft keys to select a language you understand.

Soft key	Function
中文	Chinese Language
ENGLISH	English Language

6.1.2 Setting the system date and time

AT381x features a built-in 24-hour clock.

■ To change the date:

Step 1 Enter <SYSTEM CONFIG> page

Step 2 Use the cursor key to select [Date] field

Step 3 Use the soft keys to set date.

Soft key	Function
YEAR INCR+	Increases the year in steps of 1.
YEAR DECR-	Decreases the year in steps of 1.
MONTH INCR+	Increases the month in steps of 1.
DAY INCR+	Increases the day in steps of 1.
DAY DECR-	Decreases the day in steps of 1.

■ To change the time

Step 1 Enter <SYSTEM CONFIG> page

Step 2 Use the cursor key to select [Time] field

Step 3 Use the soft keys to set time.

Soft key	Function
HOUR INCR+	Increases the hour in steps of 1.
HOUR DECR-	Decreases the hour in steps of 1.
MINUTE INCR+	Increases the minute in steps of 1.
MINUTE INCR+	Decreases the minute in steps of 1.
SECOND DECR-	Increases the second in steps of 1.
SECOND DECR-	Decreases the second in steps of 1.

6.1.3 Account Setting

The AT381x provide two accounts, administrator and user:

- Administrator: All functions can be configured by administrator except <SYSTEM SERVICE> page.
- User: All functions can be configured by user except < SYSTEM SERVICE> page and <FILE> page.

■ **To Change Account**:

Step 1 Enter <SYSTEM CONFIG> page

Step 2 Use the cursor key to select [Account] field

Step 3 Use the soft keys to set.

Soft key	Function
ADMIN	Administrator
USER	User

■ **To Change Administrator’s Password**

Step 1 Enter <SYSTEM CONFIG> page

Step 2 Use the cursor key to select [Account] field

Step 3 Use the soft keys to set.

Soft key	Function
CHANGE PASSWORD	Input password (less than 9 numbers).
DELETE PASSWORD	The password will be removed.

6.1.4 Beep Tone Setting

The beep tone setting allows beep tone to be turned on or off.

■ **To set up the beep tone**

Step 1 Enter <SYSTEM CONFIG> page

Step 2 Use the cursor key to select [Tone] field

Step 3 Use the soft keys to select.

Soft key	Function
OFF	Beep tone off
ON	Beep tone on

6.1.5 RS-232 Baud Rate Setting

The instrument provides built-in RS-232 interface. After sensing the signal conversion of the RS-232 interface, the instrument immediately communicates with the host at the set baud rate, and the keyboard is locked.

Before you can control the AT381x by issuing RS-232 commands from built-in RS-232 controller connected via its DB-9 connector, you have to configure the RS-232 baud rate. If host computer and the instrument's baud rate is different, it will not be able to communicate correctly.

The AT381x' s built-in RS-232 interface uses the SCPI language.

RS-232 configuration is as follows:

- Data bits: 8-bit
- Stop bits: 1-bit
- Parity: none
- Baud Rate: configurable

To set up the baud rate:

Step 1 Enter <SYSTEM CONFIG> page

Step 2 Use the cursor key to select [BAUD] field

Step 3 Use the soft keys to select.

Soft key	Function
1200	Use this baud rate if you are using a communication converter with optocoupler isolation.
9600	
38400	
57600	
115200	Recommend, system default.

6.1.6 [Communication Protocol] Settings

The instrument supports two communication protocols: SCPI and Modbus (RTU).

SCPI: Standard instrument communication protocol, ASCII transmission, suitable for host

computers, advanced equipment such as computer and industrial computer.

Modbus: Industrial field bus protocol, binary transmission, suitable for host PLC and touch screen devices.

To set up the communication protocol:

Step 1 Enter <SYSTEM CONFIG> page

Step 2 Use the cursor key to select [Communication Protocol] field

Step 3 Use the soft keys to select.

Soft key	Function
SCPI	ASCII transmission
MODBUS	Binary（BIN）transmission

6.1.7 【Terminator】Setting

The AT381x supports multiple terminators: LF（ASCII：0x0A）, CR（ASCII：0x0D）,CR+LF(ASCII: 0x0D 0x0A)。

The host data received by the instrument may not use the terminator, and the data sent by the instrument to the host will always end with the specified terminator.

NOTE The instrument allows the host to send instructions without a terminator, but it is recommended to add a terminator at the end of the command. Otherwise, it will cause a timeout wait after each command is received (the command timeout is 10ms~50ms depending on the baud rate).
This setting is valid only under the SCPI protocol.

■ **To set up the terminator:**

Step 1 Enter <SYSTEM CONFIG> page

Step 2 Use the cursor key to select [Terminator] field

Step 3 Use the soft keys to select.

Soft key	Function
LF	ASCII: 0x0A
CR	ASCII: 0x0D
CR+LF	ASCII: 0x0D 0x0A

6.1.8 [Command Handshake] ON/OFF

After the handshake is turned on, the instrument will return all the received data to the host as it is.

■ **To set up the command handshake ON/OFF:**

Step 1 Enter <SYSTEM CONFIG> page

Step 2 Use the cursor key to select [Command Handshake] field

Step 3 Use the soft keys to select.

Soft key	Function
OFF	
ON	

NOTE This setting is valid only under the SCPI protocol.

6.1.9 【Error Code】ON/OFF

When the error code is turned on, the AT381x will return the execution result of each instruction to the host.

When the instruction is a query, the execution will return the result of the query correctly, and the execution error will return an error code.

When the instruction does not need to return a value, the execution will return *E00 correctly, and the execution error will return an error code.

Table 6-1 SCPI error code

Error code	Description	Explanation
*E00	NO ERROR	No error
*E01	BAD COMMAND	Command error
*E02	PARAMETER ERROR	Parameter error
*E03	MISSING PARAMETER	Missing parameters, With parameter commands, no parameters are provided
*E04	INPUT BUFFER OVERRUN	Receive buffer overflow, the maximum buffer of the AT381x is 1000 bytes
*E05	SYNTAX ERROR	Syntactic error
*E06	INVALID SEPARATOR	Invalid separator
*E07	INVALID MULTIPLIER	Invalid multiplier
*E08	BAD NUMERIC DATA	Value error
*E09	VALUE TOO LONG	The value is too long, the numeric parameter exceeds 20 bytes
*E10	INVALID COMMAND	Invalid command, the command is invalid under certain conditions
*E11	UNKNOWN ERROR	Other unknown errors except the above errors

■ **To set up the error code ON/OFF:**

Step 1 Enter <SYSTEM CONFIG> page

Step 2 Use the cursor key to select [Error Code] field

Step 3 Use the soft keys to select.

Soft key	Function
OFF	Will not return error code
ON	Return error code

NOTE This setting and function is valid only under the SCPI protocol.

6.1.10 [Result Send] Setting

When the result sending function is set to automatic, the data for each measurement is automatically sent to the host.

■ **To set up the result send:**

Step 1 Enter <SYSTEM CONFIG> page

Step 2 Use the cursor key to select [Result Send] field

Step 3 Use the soft keys to select.

Soft key	Function
OFF	
ON	

NOTE This setting and function is valid only under the SCPI protocol.

6.1.11 [Data Cache]

Set the maximum data cache value for the Data [Record] function. The AT381x can set up to 10000 sets of cache data. After the cache setting value is reached, the data record will stop. This data can be saved in the external USB disk.

Please refer to the [Record] field in the [Meas Display] page.

6.1.12 [Factory Setting]

Factory setting option allow user settings to be restored to factory settings.

6.2 System Information Page

Press [Meas] or [Setup] key, press the [System] key at bottom to enter the <System Config> page, press the soft key to select [System Information].

There are no configurable options in the system information page

Figure 6-2 < System Information> page



7.File Operation

This chapter provides information on the file operation of the AT381x.

The AT381x has built-in non-volatile memory, users can save system configuration data and user data in this memory. The system's built-in memory can save 10 configuration files.
If you have the USB memory interface option installed, the data can also be saved in an external USB memory. With USB memory, you can save up to 999 measurement results files in addition to 10 sets of configuration files.

7.1 <CATALOG> Page

When press the [Meas] or [Setup] key followed by [FILE] soft key at bottom, the <CATALOG> page appears.

Figure 7-1 <CATALOG> Page

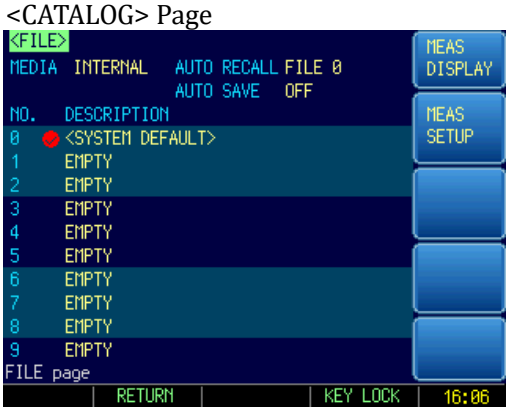

In <CATALOG> page, users can set the following functions:

- [Memory] selection – internal memory or external USB memory
- [Power On Recall] mode – Recall file 0 or last used file at boot
- [Auto Save] on/off – Save the modified data to the current file after 1 minute.
- File operations
- Soft key [Quick Save] - Save the current setting data to the current file immediately
- Soft key [Quick Recall] - Load current file data into the system immediately
- Soft key [Read File 0] - Immediately load file 0 data into the system
- Soft key [Read File 1] - Immediately load file 1 data into the system

7.1.1 [Memory] Selection

Select internal memory or external USB storage.
USB memory function cannot be enabled if the USB memory interface is not installed

■ **Procedures for selecting [Memory]**

Step 1 Enter <CATALOG> page
Step 2 Use the cursor key to select [Memory] field
Step 3 Use the soft keys to select.

Soft key	Function
Internal	Internal memory
External	USB storage

7.1.2 Recall a File at Startup [AUTO RECALL]

Users can recall file0 or current file at the instrument starts up by setting the [AUTO RECALL] field.

To select auto recall file

Step 1 Enter <CATALOG> page

Step 2 Use the cursor key to select [AUTO RECALL] field

Step 3 Use the soft keys to select.

Soft key	Function
File0	The data of file0 is always loaded when startup.
Current file	The data of the current file is loaded when startup.

7.1.3 Auto save data to last file [AUTO SAVE]

You can save the modified data into last used file when the instrument power key is pressed.

To turn on/off the AUTO SAVE function

Step 1 Enter <CATALOG> page

Step 2 Use the cursor key to select [AUTO SAVE] field

Step 3 Use the soft keys to select.

Soft key	Function
ON	Auto save function will be enabled.
OFF	Turn off the auto save function.

7.1.4 File operation

To choose a file to operate

Step 1 Enter <CATALOG> page

Step 2 Use the cursor key to select [FILE] field

Step 3 Use the soft keys to select.

Soft key	Function
SAVE	Save user configuration data into current selected file.
Read	Load current file data into the system
Delete	Delete all data of the current file, and the file is also cleared at the same time.

NOTE Deleted files, if automatically recalled at startup, the system will create files with default values.

8.PLC（Handler）Interface

This chapter provides information of AT381x’ s built-in handler interface. Include:

- Pin Assignment
- Circuit Diagram
- Timing Chart

The instrument provides user with a full-featured processor interface that includes 14 bins sorting output, IDX (AD conversion end signal), EOM (test completion signal), TRIG (external trigger start) input, comparator record number input signal, etc. Through this interface, the AT381x can easily perform automatic control functions with user system control components.

8.1 Pin Assignment

Figure 8-1 Pin Assignment

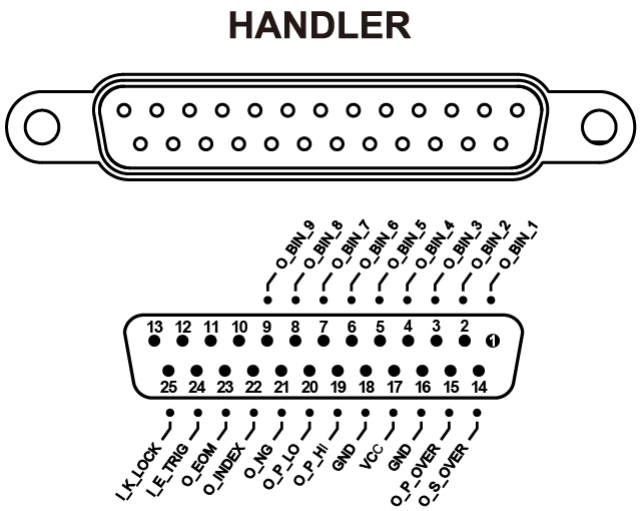

■ Output Terminal（All signals are valid low level）

Table 8-1 Description of Handler Interface Output Signals

Pin	Pin Name	Signal Description	Level State
1	O_BIN_1	BIN1 Output (GD)	low level valid
2	O_BIN_2	BIN2 Output (GD)	low level valid
3	O_BIN_3	BIN3 Output (GD)	low level valid
4	O_BIN_4	BIN4 Output (GD)	low level valid
5	O_BIN_5	BIN5 Output (GD)	low level valid
6	O_BIN_6	BIN6 Output (GD)	low level valid
7	O_BIN_7	BIN7 Output (GD)	low level valid
8	O_BIN_8	BIN8 Output (GD)	low level valid
9	O_BIN_9	BIN9 Output (GD)	low level valid

14	O_S_OVER	Secondary parameter output (NG)	low level valid，AUX function is turned on
15	O_P_OVER	Primary parameter output (NG)	low level valid
19	O_P_HI	Main measuring output (over higher limit)	low level valid
20	O_P_LO	Main measuring output (over lower limit)	low level valid
21	O_NG	BUS output (NG)	low level valid
22	O_INDEX	ADC in conversion	high level valid
23	O_EOM	Measurement in conversion	high level valid

■ Input Terminal

Table 8-2 Description of Handler Interface Input Signals

Pin	Name	Signal Description
24	I_E_TRIG	External input, valid rising edge
25	I_K_LOCK	Keyboard lock signal. Low level keyboard locked, high level or floating unlocked.

■ Power Rating

Table 8-3 Description of Handler Interface Power Rating Signals

Pin	Name	Signal Description
16,18	GND	External power supply COM terminal
17	VCC	External power supply VCC input

8.2 Connection Method

■ Use external power supply (recommended)

Please connect the external power supply to the following pins at the same time:

VCC：Pin-17

GND：Pin-16，17

■ Electrical Characteristics

Power supply： +12。4V~36VDC，0.2A（minimum）

Output signal： The collector output of the built-in pull-up resistor. Optocoupler isolation.

Input signal： Optocoupler isolation.



Note: To avoid damage to the interface, do not exceed the power supply voltage requirements.
To avoid damage to the interface, wire the instrument after it has been turned off.
If the output signal is used by users to control the relay, the output optocoupler can only push the small signal relay. The relay must use the reverse energy release diode. If you need to push the high power relay, please increase the triode to push.

■ Input terminal schematic

Figure 8-2 Typical Circuit Diagram of Handler Interface Input signals（Trig）

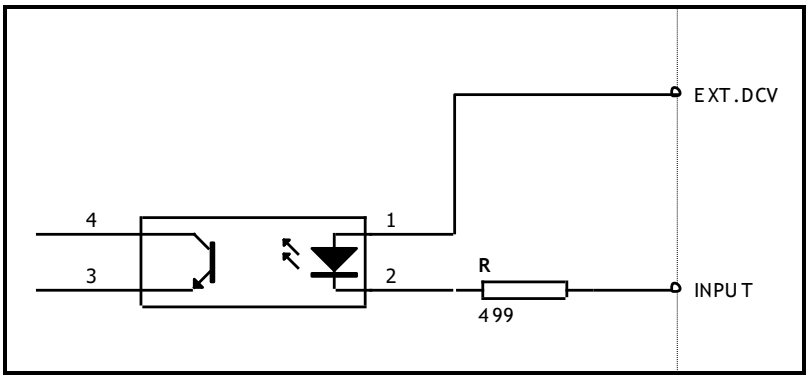

■ Output terminal schematic

Figure 8-3 Typical Circuit Diagram of Handler Interface Output signals（sorting，IDX，EOM）

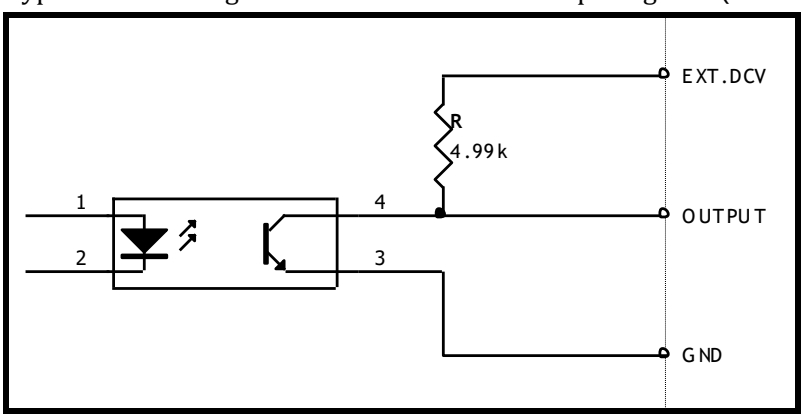

Maximum source current：5mA

Maximum reverse current：50mA

8.3 Timing Chart

■ **Recommended signal input and output timing chart**

The AT381x completes one sampling and is completely controlled by an external device (PLC, etc.).

Figure 8-4 Signal timing chart

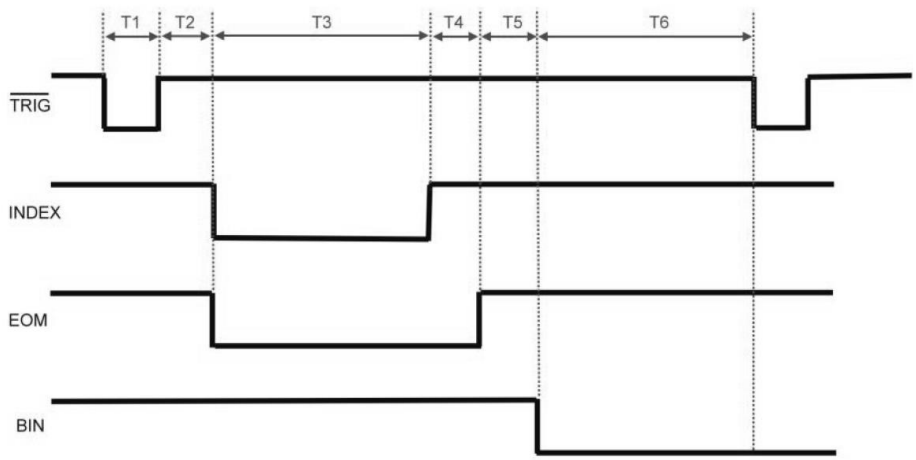

Table 8-4 Timing

Time	Description		Minimum
T1	Trigger pulse width		1ms
T2	Measurement cycle	Trigger delay time	<10μs
T3		ADC time	（Related to measurement speed）
T4		Operation time	1ms
T5		Comparator result delay time	200μs
T6	Await next trigger		0μs

9.Remote Control

This chapter provides the following information:

- About RS-232 Interface
- RS-232 Connection
- Select Baud Rate.
- About SCPI

AT381x can use RS-232 interface to communicate with the computer to complete all the instrument functions. With standard SCPI commands, users can also easily create a variety of acquisition systems that are suitable for them.

9.1 About RS-232C

RS-232 is a widely used serial communication standard, also known as asynchronous serial communication standard, for data communication between computers and computers, between computers and peripherals. RS is the English abbreviation of "Recommended Standard", and 232 is the standard number. The standard is officially published by the Electronic Industries Association (EIA) in 1969. It is required to transmit one bit at a time via one data line.

Most serial port configurations are usually not strictly based on the RS-232 standard: 25-pin connectors are used on each port (now computers basically use 9-pin connectors). The most commonly used RS-232 signals are shown in the table:

Table 9-1 The minimum subset of the RS-232 standard

Signal	Sign	9-pin connector pin number
Send	TXD	2
Receive	RXD	3
Gound	GND	5

9.1.1 RS232C Connection

Figure 9-1 RS-232 interface on the rear panel [male]

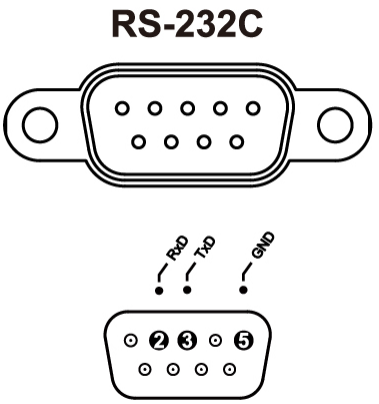

Recommendation: To avoid electrical shock, turn off AT381x when connect or disconnect the connector.

- AT381x default communication settings:

Transmission method: Full-duplex asynchronous communication with start and stop bits

Data bits: 8-bit

Stop bits: 1-bit

Parity: none

9.1.2 How to Connect

Figure 9-2 RS-232 interface on the rear panel [male]

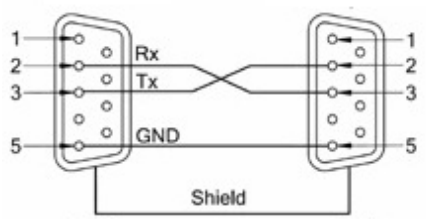

The RS-232 serial interface can be interconnected with a serial interface of a controller (eg PC or IP) via a 2-3 crossed DB-9 cable.

9.2 Protocol

The AT381x supports two communication protocols: SCPI and Modbus (RTU).

9.3 SCPI Protocol:

SCPI is the abbreviation of Standard Commands for Programmable Instruments: SCPI. The SCPI protocol defines a set of standard syntax and commands for controlling programmable test and measurement instruments. SCPI commands are transmitted using ASCII strings and passed to the instrument through the physical transport layer. Commands consist of a series of keywords, and some need to include parameters. In the agreement, the order is defined as follows: CONFigure. In use, you can write a full name, or just write an abbreviation that only contains uppercase letters. The instrument's feedback to the query command is also ASCII

code. In fact, for simple applications (such as PLC), you only need to translate the commands into HEX bytes and then transfer them in bytes.

9.3.1 Modbus(RTU) Protocol

The Modbus protocol is a general-purpose language applied to electronic controllers and is mainly used for BUS protocols in industrial fields. It is the communication standard for industrial control equipment such as PLC and touch screen.

10. SCPI Command Reference

This chapter contains the following information:

- Terminator - rules of the terminator
- Command syntax - command line writing rules
- Query syntax - writing rules of query command
- Query response - format of the query response
- Command reference

This section provides all SCPI commands used by AT381x. With these SCPI commands, users can complete control over all functions of the instrument.

10.1 Handshake Protocol

Since the AT381x uses the minimum subset of the RS-232 standard and does not use hardware handshaking signals, the AT381x can use software handshaking in order to reduce possible data loss or data errors in communication. High-level language software engineers should strictly follow the handshake below agreement to make preparation of computer communication software:

- Instrument terminator only accepts ASCII format, command response also returns ASCII code.
- **Command string that sent by host must be ended with NL ('\n') mark, instrument terminator will begin performing command string only after it receives end mark.**
- Instrument can set command handshake: instrument will return an identification code after it receives command and finishes processing.

Tip: If the host cannot accept the data returned by the instrument, you can try to solve it by using the following methods:
1. The software handshake is turned off, please refer to the <System Setup> page of the instrument to turn it on.
2. The serial port connection is faulty, please check the cable connection.
3. The communication format of the high-level language program on the computer side is incorrect. Try on checking the serial port number, whether the communication format is correct, and the baud rate is the same as the instrument setting.
4. If the instrument is parsing the last command and the host cannot receive the response from the instrument, please try again later.
<The problem still cannot be solved, please consult Applent Technical Engineer immediately>

10.2 Terminator

The AT381x supports 4 terminators:

LF (Hexadecimal：0x0A)

CR(Hexadecimal：0x0D)

CR+LF (Hexadecimal：0x0D 0x0A)
NUL (Hexadecimal：0x00)

The terminator can be selected in the system configuration page, and the instrument defaults is LF.

Note:
The AT381x allows the command sent by the host without the terminator, but it is recommended to add the terminator at the end of the command. Otherwise, it will cause a timeout wait after each command is received (the command timeout is 10ms~50ms depending on the baud rate).

10.3 Terminator

Host can send a string of command to instrument, instrument terminator will begin parsing after it captures end mark (\n) or after input buffer overflows.

For example:

Legal command string:
AAA:BBB CCC,DDD,EEE

AT381x terminator is responsible for parsing and performing all commands, before programming, users must know about parsing rules.

10.3.1 Terminator Rules

1. Terminator only parses and responds ASCII code' s data.
2. **Command string must be ended with terminator, terminator will begin performing command string only after it receives end mark or after** buffer overflows.
3. If command handshake is turned on, every time terminator receives one string, it will promptly return this string to the host, only when host receives this returned string, can it continues sending the next string.
4. After terminator parses error, it will promptly stop parsing, and the current command is canceled.
5. When terminator parses the query command, it will terminate parsing this command string, the latter command string will be ignored.
6. When parsing command string, terminator is case insensitive.
7. Terminator supports command abbreviated form, please refer to the latter chapter regarding abbreviation norms.

10.3.2 Notation Conventions and Definitions

This chapter employs some marks, these marks are not a part of command tree; they are only for better understanding of command string.

< >	*the character in <> means this command's parameter*
[ ]	*the character in [] means optional command*
{}	*When there includes several parameter items in {}, means that users can only choose one item from it.*
( )	*the abbreviated form of parameter is put in ()*
Capital letter	*Abbreviated form of command.*

10.3.3 Command Structure

The SCPI commands are tree structured three levels deep. The highest level commands are called the subsystem commands in this manual. So the lower level commands are legal only when the subsystem commands have been selected. A colon (:) is used to separate the higher level commands and the lower level commands.

Figure 10-1 Command Tree Structure

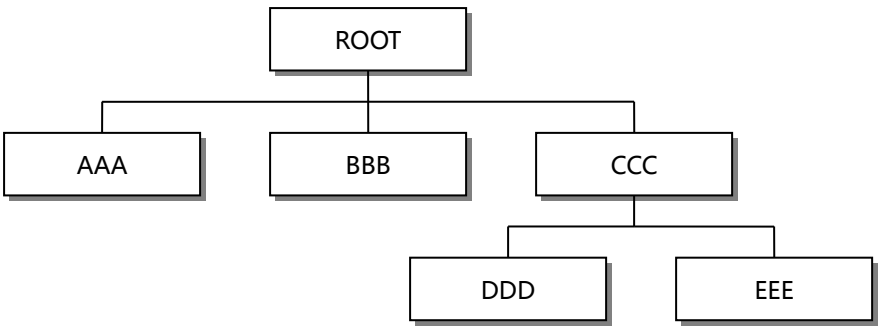

Example

ROOT:CCC:DDD ppp

ROOT Subsystem Command

CCC Level 2

DDD Level 3

ppp Parameter

10.4 Header and Parameters

A command tree consists of header and parameters, it uses a space（ASCII: 20H）to separate in the middle.

Example

AAA:BBB 1.234

Header [Parameter]

10.4.1 Header

Headers can be of the long form or the short form. The long form allows easier understanding of the program code and the short form is suitable for writing.

10.4.2 Parameter

- Single command word, no parameter.
  Example: AAA:BBB
- Parameter can be character string form, the abbreviation rules are the same as the rules for command.
  Example: AAA:BBB 1.23
- Parameter can be numeric form
  - *<integer>* integer 123, +123, -123
  - *<float>* floating number

1. <Fixfloat>: fixed point floating number: 1.23, -1.23
2. <Scifloat>: scientific notation floating number: 1.23E+4, +1.23e-4
3. <Mpfloat>: multiplier expressed by floating number: 1.23k, 1.23M,1.23G,1.23u

Table 10-1 Multiplier Mnemonics

Definition	Mnemonic
1E18 (EXA)	EX
1E15 (PETA)	PE
1E12 (TERA)	T
1E9 (GIGA)	G
1E6 (MEGA)	MA
1E3 (KILO)	K
1E-3 (MILLI)	M
1E-6 (MICRO)	U
1E-9 (NANO)	N
1E-12 (PICO)	P
1E-15 (PEMTO)	F
1E-18 (ATTO)	A



Multiplier is Case Insensitive, its writing style is different from standard name.

10.4.3 Separator

The AT381x terminator only accepts allowed separators, terminator will occur "Invalid separator (illegal separator)" error if beyond this separator, and these separators include:

: colon, used for separate command tree, or restart command tree.
Example: AAA:BBB:CCC 123.4

? question mark, used for query
Example: AAA?

□ space, used for separate parameter
Example: AAA:BBB□1.234

10.4.4 Error Code

The AT381x temporarily stores the result of the processing of each received command in the buffer. Before the next command is sent, the status can be acquired by the ERR? command. If the error code function is turned on in [System Config] page, the instrument will automatically return the processing result after processing the command.

Table 10-2 SCPI error code

Error code	Description	Explanation
*E00	NO ERROR	No error
*E01	BAD COMMAND	Command error
*E02	PARAMETER ERROR	Parameter error
*E03	MISSING PARAMETER	Missing parameters, With parameter commands, no parameters are provided

*E04	INPUT BUFFER OVERRUN	Receive buffer overflow, the maximum buffer of the AT381x is 1000 bytes
*E05	SYNTAX ERROR	Syntactic error
*E06	INVALID SEPARATOR	Invalid separator
*E07	INVALID MULTIPLIER	Invalid multiplier
*E08	BAD NUMERIC DATA	Value error
*E09	VALUE TOO LONG	The value is too long, the numeric parameter exceeds 20 bytes
*E10	INVALID COMMAND	Invalid command, the command is invalid under certain conditions
*E11	UNKNOWN ERROR	Other unknown errors except the above errors

10.5 Command Reference

- DISPlay SUBSYSTEM
- FUNCtion SUBSYSTEM
- FREQuency SUBSYSTEM
- VOLTage SUBSYSTEM
- APERture SUBSYSTEM
- FETCh SUBSYSTEM
- COMParator SUBSYSTEM
- LIST SUBSYSTEM
- CORRection SUBSYSTEM
- TRIGger SUBSYSTEM
- BIAS SUBSYSTEM
- FILE SUBSYSTEM
- ERRor SUBSYSTEM
- Common commands
  *TRG
  *IDN?
  *SAV
  *RCL

10.6 DISPlay Subsystem

The DISP Subsystem command group sets the display page.

Figure 10-1 DISP Command Tree

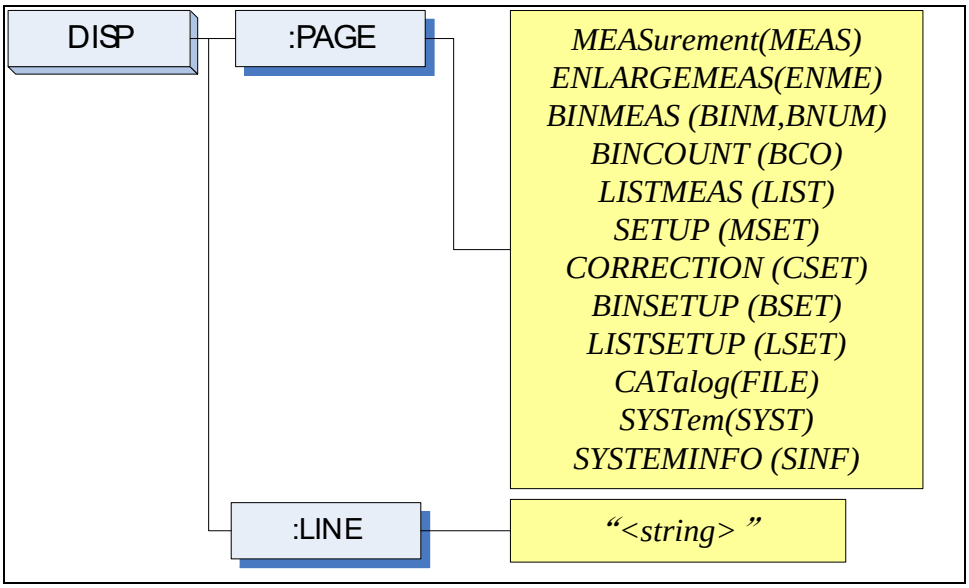

10.6.1 DISP:PAGE

The :PAGE command sets the display page.

The :PAGE? Query returns the abbreviated page name currently displayed on the LCD screen.

Command Syntax	**DISP:PAGE <*page name*>**
Parameter	**Where, <page name> is:**
	MEASurement [or MEAS] Sets display page to MEAS DISPLAY
	ENLARGE[or ENLA] Sets display page to ENLARGE DISPLAY
	BINMEAS [or BINM] Sets display page to BIN MEAS
	BINCOUNT [or BCO] Sets display page to BIN COUNT
	LISTMEAS [or LIST] Sets display page to LIST MEAS
	SETUP [or MSET] Sets display page to MEAS SETUP
	CORRECTION [or CSET] Sets display page to CORRECTION
	BINSETUP [or BSET] Sets display page to BIN SETUP
	LISTSETUP [or LSET] Sets display page to LIST SETUP
	CATalog [or CAT] Sets display page to CATALOG
	SYSTem [or SYST] Sets display page to SYSTEM CONFIG
	SYSTEMINFO [or SINF] Sets display page to SYSTEM INFORMATION
Example	**SEND> DISP:PAGE SYST //Set to the SYSEMT CONFIG**
Query Syntax	**DISP:PAGE?**
Query Response	**<*page name*>**
Example	**SEND> DISP:PAGE?** **RET> SYST**

10.6.2 DISP:LINE

The :LINE command enters an arbitrary comment line of up to 30 ASCII characters in the comment field.

Command Syntax	**DISP:LINE "<*string*>"**
Parameter	Where, <string> is ASCII character string (30 ASCII characters)
Example	**SEND> DISP:LINE "This is a comment."**

10.7 FUNCtion Subsystem

The FUNCtion subsystem command group sets the measurement function, the measurement range, monitors parameter control.

Figure 10-2 FUNCtion Subsystem Tree

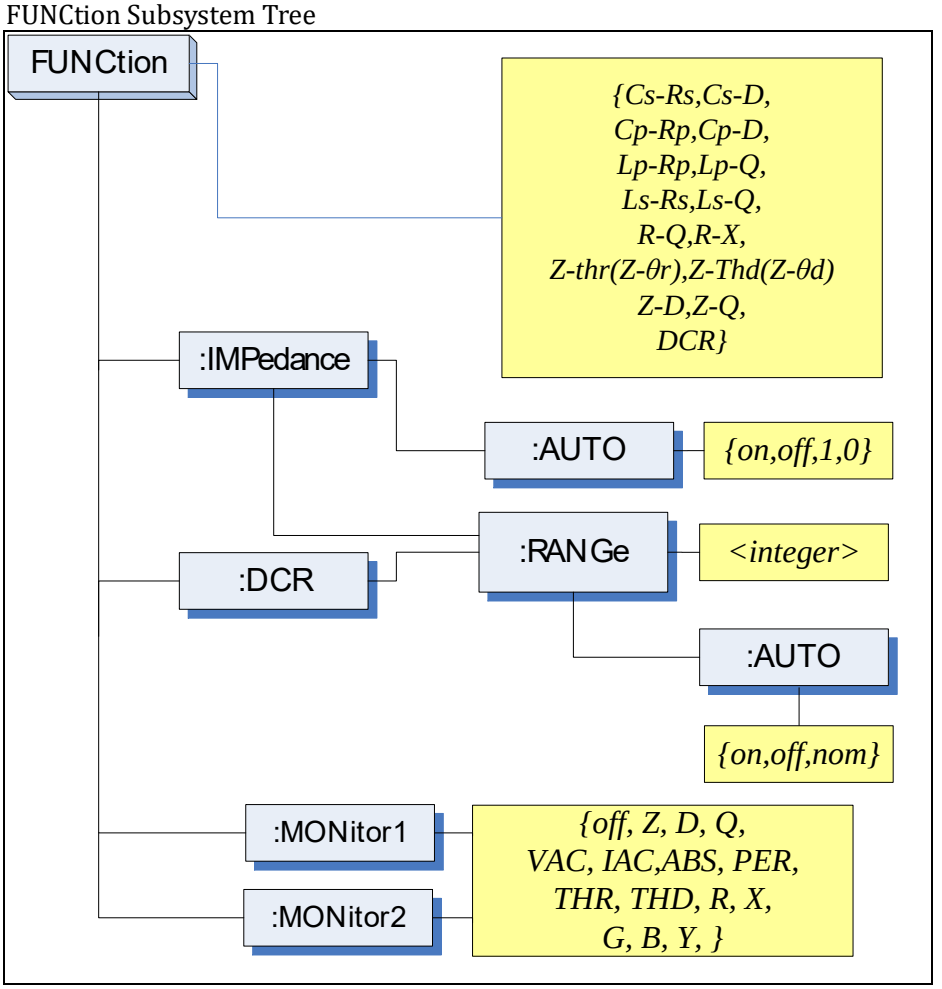

10.7.1 FUNCtion

The FUNCtion command sets the measurement function.

Command Syntax	`FUNC <function>`

Parameter	`Where, <function> is:`
	`Cs-Rs, Cs-D, Cp-Rp, Cp-D,`
	`Lp-Rp, Lp-Q, Ls-Rs, Ls-Q,`
	`Rs-Q, Rp-Q, R-X, DCR,`
	`Z-θr(or Z-thr)*1, Z-θd(Z-thd) *1`
	`Z-D,Z-Q`
	`(*1: θ is ASCII Hex 0xE9)`

Example	`SEND> FUNC Cp-D //Set measurement function to Cp-D`
Query Syntax	`FUNC?`
Query Response	`<function>`
Example	`SEND> FUNC?` `RET> Cp-D`

10.7.2 FUNCtion:IMPedance:AUTO

The FUNCtion:IMPedance:AUTO command sets the impedance' s LCZ Automatic selection.

Command Syntax	`FUNC:IMPedance:AUTO {ON,OFF, 0,1}`

Example	SEND> FUNC:IMP:AUTO ON
Query Syntax	FUNC:IMPedance:AUTO?
Query Response	{on,off}
Example	SEND> FUNC:IMP:AUTO? RET> off

10.7.3 FUNCtion:IMPedance:RANGe

The FUNCtion:IMPedance:RANGe command sets the impedance' s measurement range.

Command Syntax	FUNC:IMPedance:RANGe *<0-8,MIN,MAX>*
Parameter	Where, <0-8,MIN, MAX> is: 0-8, The range number MIN, =Range 0 MAX, =Range 8
Example	SEND> FUNC:IMP:RANG 2 //Set measurement range to [2] 10kΩ
Query Syntax	FUNC:IMPedance:RANGe?
Query Response	*<0-8>*
Example	SEND> FUNC:IMP:RANG? RET> 0

10.7.4 FUNCtion:DCR:RANGe

The FUNCtion:DCR:RANGe command sets the DCR' s measurement range.

Command Syntax	FUNC:DCR:RANGe *<0-8,MIN,MAX>*
Parameter	Where, <0-8,MIN, MAX> is: 0-8, The range number MIN, =Range 0 MAX, =Range 8
Example	SEND> FUNC:DCR:RANG 2 //Set DCR range to [2] 10kΩ
Query Syntax	FUNC:DCR:RANGe?
Query Response	*<0-8>*
Example	SEND> FUNC:DCR:RANG? RET> 0

10.7.5 FUNCtion:RANGe:AUTO

The FUNCtion:RANGe:AUTO command sets the auto range to ON or OFF.

Command Syntax	FUNC:RANGe:AUTO *{off(hold),on(auto),NOMinal}*
Parameter	Where, *{off(hold),on(auto),NOMinal}* is: off(or hold): Sets the auto range to off. on(or auto): Sets the auto range to on. NOMinal: See Page 错误!未定义书签。 Section 错误!未找到引用源。 错误!未找到引用源。
Example	SEND> FUNC:RANG:AUTO AUTO //Sets to auto range. SEND> FUNC:RANG:AUTO off //Sets auto range to off.
Query Syntax	FUNC:RANGe:AUTO?
Query Response	*{HOLD,AUTO,NOM}*
Example	SEND> FUNC:RANG:AUTO? RET> auto

10.7.6 FUNCtion:MONitor1 /2

The FUNCtion:MONitor1 and FUNCtion:MONitor2 commands set the two monitor parameter.

Command Syntax	FUNC:MONitor1 *{off, Z, D, Q, THR, THD, R, X, G, B, Y, ABS, PER VAC, IAC}* FUNC:MONitor2 *{off, Z, D, Q, THR, THD, R, X, G, B, Y, ABS, PER VAC, IAC}*
Parameter	Where, *{off, Z, D, Q, THR, THD, R, X, G, B, Y, ABS, PER VAC, IAC}*

Example	`SEND> FUNC:MON1 Z`
Query Syntax	`FUNC:MON1?` `FUNC:MON2?`
Query Response	*{off, Z, D, Q, THR, THD, R, X, G, B, Y, ABS, PER VAC, IAC}*
Example	`SEND>  FUNC:MON1?` `RET>  off`

10.8 FREQuency Subsystem

The FREQuency command sets the oscillator frequency. The FREQuency? Query returns the current test frequency setting.

Figure 10-3 FREQ Subsystem Command Tree

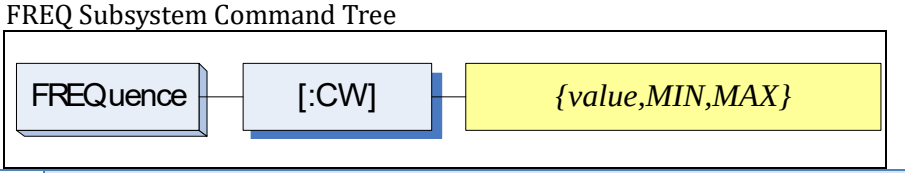

Command Syntax	`FREQ[:CW] {<value>,MIN,MAX}`
Parameter	`Where,` <value> is the numeric data (NR1 integer, NR2 fix float or NR3 floating point). MIN Sets to the minimum value MAXSets to the maximum value
Example	`SEND> FREQ 1K  //Set to 1kHz,the Hz cannot be added.`
Query Syntax	`FREQ[:CW]?`
Query Response	`<NR3>` NR3 floating point
Example	`SEND>  FREQ?` `RET>  1.000000E+03`
Note	A suffix multiplier (k) can be used with this command. But the suffix unit Hz can’ t be used. This command CANNOT be used in LIST SWEEP DISPLAY page and CORRECTION page.

10.9 LEVel Subsystem

The Level subsystem sets the oscillator’ s output voltage/current level and source output Impedance

Figure 10-4 LEVel Subsystem Command Tree

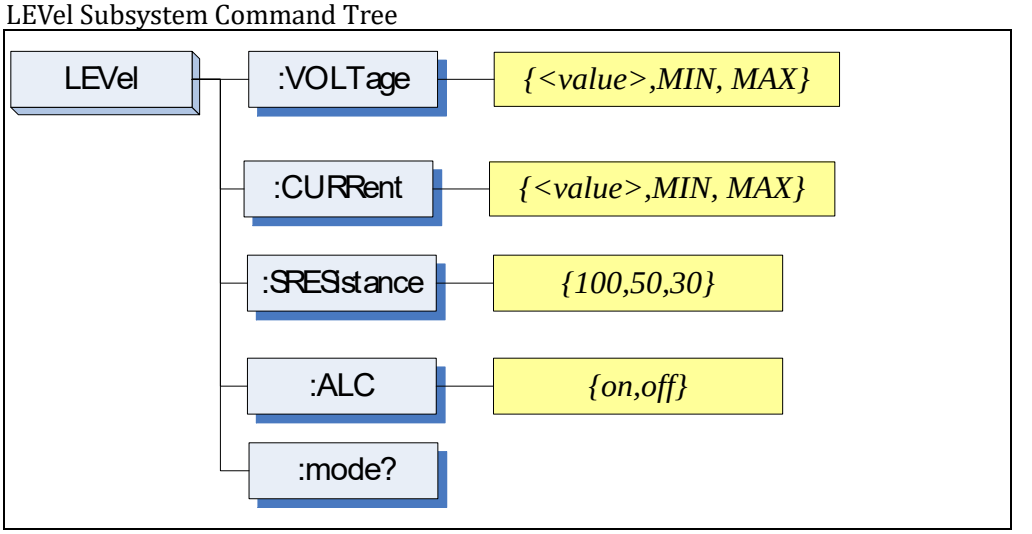

10.9.1 LEVel:VOLTage (=VOLTage[:LEVel])

The LEVel:VOLTage or VOLTage[:LEVel] command sets the oscillator’ s output voltage level.

Command Syntax	**LEVel:VOLTage {<value>,MIN,MAX}** **or VOLTage:LEVel {<value>,MIN,MAX}**
Parameter	**Where,** <value> is the numeric data (NR1, NR2 or NR3). MIN Sets to the minimum value of voltage MAXSets to the maximum value
Example	**SEND> LEV:VOLT 0.3 //Set to 0.3V,the unit V can be ignored.**
Query Syntax	**LEVel:VOLTage?** **or CURRent:LEVel?**
Query Response	**<NR3>** NR3 floating point
Example	**SEND> VOLT?** **RET> 1.000000e+00**
Note	The suffix unit V can’ t be ignored This command CANNOT be used in LIST MEAS page and CORRECTION page.

10.9.2 LEVel:CURRent (=CURRent[:LEVel])

The LEVel:CURRent or CURRent[:LEVel] command sets the oscillator’ s output current level.

Command Syntax	**LEVel:CURRent {<value>,MIN,MAX}** **or CURRent:LEVel {<value>,MIN,MAX}**
Parameter	**Where,** <value> is the numeric data (NR1, NR2 or NR3). MIN Sets to the minimum value of current MAXSets to the maximum value of current
Example	**SEND> LEV:CURR 1m //Set to 1mA, unit V can be ignored.**
Query Syntax	**LEVel:CURRent?** **or CURRent:LEVel?**
Query Response	**<NR3>** NR3 floating point
Example	**SEND> VOLT?** **RET> 1.000000e+00**
Note	The suffix unit V can’ t be ignored This command CANNOT be used in LIST MEAS page and CORRECTION page.

10.9.3 LEVel:SRESistance (= VOLTage:SRESistance)

The LEVel:SRESistance or VOLTage:SRESistance command sets the source output Impedance.

Command Syntax	**LEVel:SRESistance {30,50,100}** **VOLTage:SRESistance {30,50,100}**
Parameter	**{30,50,100}** **Where,** 30 Sets the output impedance to 30Ω 50 Sets the output impedance to 50Ω 100 Sets the output impedance to 100Ω
Example	**SEND> LEV:SRES 30** //Set to 30Ω, the unit Ω cannot be added.
Query Syntax	**VOLTage:SRES?** **or LEVel:SRES?**
Query Response	**<NR1>** NR1 integer
Example	**SEND> LEV:SRES?** **RET> 30**

Note	The suffix unit Ω can' t be used with this command. This command CANNOT be used in LIST SWEEP DISPLAY page and CORRECTION page.

10.9.4 LEVel:ALC (=AMPlitude:ALC)

The LEVel:ALC or AMPlitude:ALC command enables the Automatic Level Control (ALC).

Command Syntax	**LEVel:ALC {on,1,off,0}** **AMPlitude:ALC {on,1,off,0}**
Parameter	**{on,1,off,0}** **Where,** on (1) Enable ALC off(0) Turn off the ALC.
Example	**SEND> LEV:ALC on**
Query Syntax	**LEV:ALC?** **or AMP:ALC?**
Query Response	**{on,off}**
Example	**SEND> LEV:ALC?** **RET> off**
Note	This command CANNOT be used in LIST MEAS page , CORRECTION page and DCR mode.

10.10 APERture Subsystem

The **APERture** subsystem command sets the integration time of the ADC and the averaging rate.

Figure 10-5 APERture Subsystem Command Tree

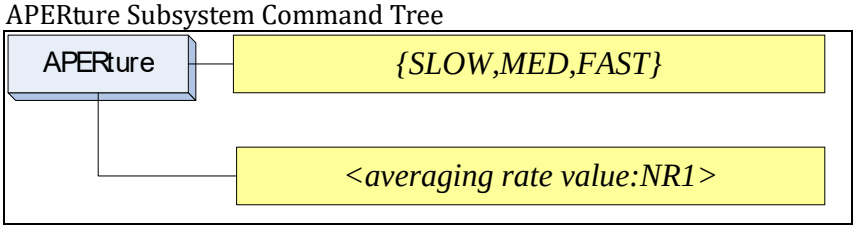

Command Syntax	**APERture {SLOW,MED,FAST}** **APERture <value>** **SPEED(spd) {SLOW,MED,FAST}** **SPEED(spd) <value>**
Parameter	Where, SLOW Set test speed to slow MED Set test speed to medium FAST Set test speed to fast <value> NR1(0 to 256): Averaging rate (0=OFF=1)
Example	**SEND> APER FAST** **SEND> APER 10**
Query Syntax	**APER?**
Query Response	**{SLOW,MED,FAST},<avg value>**
Example	**SEND> APER?** **RET> slow,0**

10.10.1 APERture:RATE?

The **APERture:RATE?** query returns the current integration time.

Query Syntax	**APER:RATE?**
Query Response	**SLOW**

Example	SEND> APER:RATE? RET> slow

10.10.2 APERture:AVG?

The **APERture:AVG?** query returns the averaging rate settings.

Query Syntax	APER:AVG?
Query Response	<NR1> Integer (0 to 256)
Example	SEND> APER:AVG? RET> 0

10.11 FETCh Subsystem

The FETCh subsystem command group is a sensor-only command which retrieves the measurement data taken by measurement(s) initiated by a trigger, and places the data into the output buffer.

Figure 10-6 FETCh Subsystem Command Tree

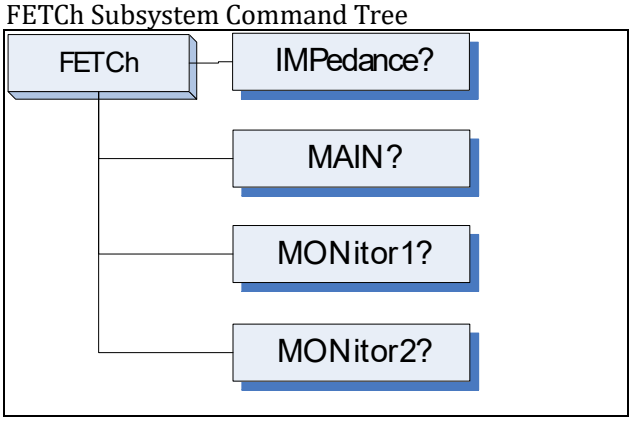

10.11.1 FETCh?

The FETCh? query sets the latest measurement data of the primary , secondary parameters and comparator result into the output buffer.

Query Syntax	FETCh?
Query Response	<NR3:primary value>,<NR3:secondary value>,<comparator result>
Example	SEND> FETC? RET> +2.617886e-11,+5.454426e-01,BIN1,AUX-OK,OK RET> +1.23434e+05,OUT ,NG //DCR & Comp on

10.11.2 FETCh:IMPedance?

The FETCh:IMPedance? query sets the latest measurement data of the primary , secondary parameters monitor1 and monitor2 result into the output buffer.

Query Syntax	FETCh?
Query Response	<NR3:primary value>,<NR3:secondary value>,<comparator result>
Example	SEND> FETC? RET> +2.617886e-11,+5.454426e-01,BIN1,AUX-OK,OK RET> +1.23434e+05,BIN1,OK //DCR & Comp on

10.11.3 FETCh:MAIN?

The FETCh:MAIN? query sets the latest measurement data of the primary and secondary parameters

Query Syntax	**FETCh:MAIN?**
Query Response	<NR3:primary value>,<NR3:secondary value>
Example	**SEND> FETC:MAIN?** **RET> +2.021009e-11,+1.644222e-01//LCR** **Primary ,Secondary** **RET> +1.23434e+05//DCR**

10.11.4 FETCh:MONitor1? /2?

The FETCh:MONitor1? and FETCh:MONitor2 set the latest measurement data of the moniter1 and moniter2 parameters into the output buffer.

Query Syntax	**FETCh:MONitor1? and FETCh:MONitor2?**
Query Response	<NR3: moniter1/2 value>
Example	**SEND> FETC:MON1?** **RET> +3.886517e+05** **RET> +0.000000e+00 //0: The monitor 1 is OFF**

10.11.5 FETCh:MONitor?

The FETCh:MONitor? set the latest measurement data of the moniter1 and moniter2 parameters into the output buffer.

Query Syntax	**FETCh:MONitor?**
Query Response	<NR3: moniter1/2 value>
Example	**SEND> FETC:MON?** **RET> +3.886517e+05,+0.000000e+00** **(0: The monitor 2 is OFF)**

10.12 COMParator Subsystem

The COMParator subsystem command group sets the comparator function, including its ON/OFF setting, limit mode, and limit values.

Figure 10-7 COMParator Subsystem Command Tree

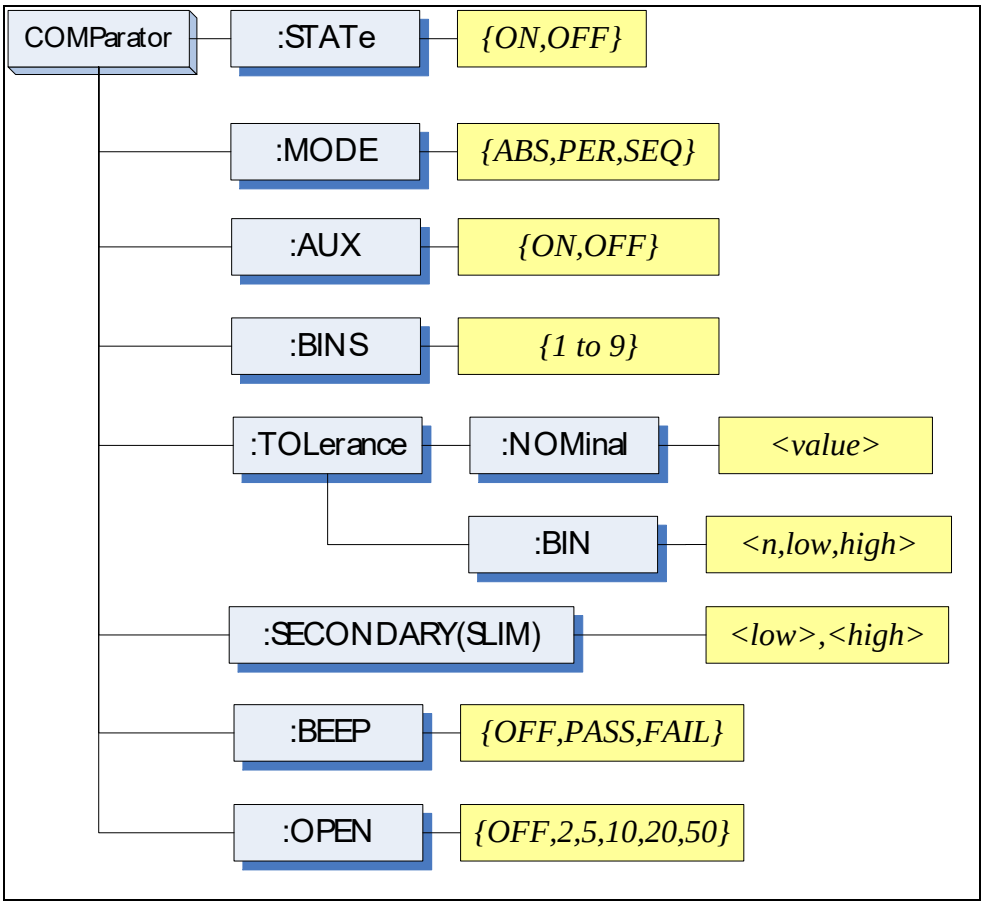

10.12.1 COMParator:STATe

The COMParator:STATe command sets the comparator function to ON or OFF.

Command Syntax	`COMParator:STATe {ON,OFF,1,0}`
Parameter	`Where,` ON or 1 Sets the comparator to ON OFF or 0 Sets the comparator to OFF
Example	`SEND> COMP:STAT OFF`
Query Syntax	`COMParator:STATe?`
Query Response	`{on,off}`
Example	`SEND> COMP:STAT?` `RET> on`

10.12.2 COMParator:MODE

The :COMParator:MODE command sets the limit mode of the comparator function.

Command Syntax	`COMParator:MODE {ABS,PER,SEQ}`
Parameter	`Where,{ABS,PER,SEQ} is:` ABS Absolute tolerance mode PER Percent tolerance mode SEQ Sequential mode
Example	`SEND> COMP:MODE PER`
Query Syntax	`COMParator:MODE?`
Query Response	`{abs,per,seq}`
Example	`SEND> COMP:MODE?` `RET> abs`

10.12.3 COMParator:AUX

The COMParator:AUX command sets the auxiliary BIN counting function of the comparator to ON or OFF.

Command Syntax	**COMParator:AUX {ON,OFF,1,0}**
Parameter	**Where,{ON,OFF,1,0} is:** ON or 1 Set the AUX BIN to ON OFF or 0 Set the AUX BIN to OFF
Example	**SEND> COMP:AUX OFF**
Query Syntax	**COMParator:AUX?**
Query Response	**{on,off}**
Example	**SEND> COMP:AUX?** **RET> on**

10.12.4 COMParator:BINS

The COMParator:BINS command sets the total number of bins.

Command Syntax	**COMParator:BINS <*value*>**
Parameter	**Where,{value} is:** NR1 (1 to 9)
Example	**SEND> COMP:BINS 3**
Query Syntax	**COMParator:BINS?**
Query Response	**<NR1> (1 to 9)**
Example	**SEND> COMP:BINS?** **RET> 3**

10.12.5 COMParator:TOLerance:NOMinal

The COMParator:TOLerance:NOMinal command sets the nominal value for the tolerance mode of the comparator function.

Command Syntax	**COMParator:TOLerance:NOMinal <*value*>**
Parameter	**Where,<value> is:** NR1, NR2 or NR3 A suffix multiplier can be used with this command. But the suffix unit F/Ω/H can' t be used.
Example	**SEND> COMP:TOL:NOM 100N** **SEND> COMP:TOL:NOM 1E-6**
Query Syntax	**COMParator:TOLerance:NOMinal?**
Query Response	**<NR3>**
Example	**SEND> COMP:TOL:NOM?** **RET> 1.000000e-06**

10.12.6 COMParator:TOLerance:BIN

The COMParator:TOLerance:BIN command sets the low/high limit values of each BIN for the comparator function tolerance mode.

Command Syntax	**COMParator:TOLerance:BIN <*n*>,<*low limit*>,<*high limit*>**
Parameter	**Where,<*n*>,<*low limit*>,<*high limit*> is:** n NR1 (1 to 9): Bin number low limit NR1,NR2 or NR3: low limit value high limit NR1,NR2 or NR3: high limit value
Example	**SEND> COMP:TOL:BIN 1,100P,200P** **SEND> COMP:TOL:BIN 2,200E-6,300E-6**

Query Syntax	**COMParator:TOLerance:BIN? <n>**
Parameter	**Where,<*n*> is:** NR1 (1 to 9): Bin number
Query Response	**<NR3:low limit>,<NR3:high limit>**
Example	**SEND> COMP:TOL:BIN? 2** **RET> 1.000000e-06,2.000000E-6**

10.12.7 COMParator:SLIM

The COMParator:SLIM or COMParator:secondary command sets the LOW/HIGH limit values for the secondary parameter.

Command Syntax	**COMParator:SLIM <low *value*>,<*high value*>** **COMParator:secondary <low *value*>,<*high value*>**
Parameter	**Where, <low *value*>,<*high value*> is:** <low value> NR1,NR2 or NR3: low limit value <high value> NR1,NR2 or NR3: high limit value A suffix multiplier can be used with this command.
Example	**SEND> COMP:SLIM 0.0001,0.0010**
Query Syntax	**COMParator:SLIM?** **COMParator:secondary?**
Query Response	**<NR3:low limit>,<NR3:high limit>**
Example	**SEND> COMP:SLIM?** **RET> 1.000000e-04,1.000000e-03**

10.12.8 COMParator:BEEP

The :COMParator:BEEP command sets beep mode of the comparator function.

Command Syntax	**COMParator:BEEP {OFF,PASS,FAIL}**
Parameter	**Where,** OFF Turns the beeper off. PASS Sounds a beep when the test is passed (BIN1~BIN9). FAIL Sounds a beep when the test is failed (OUT).
Example	**SEND> COMP:BEEP PASS**
Query Syntax	**COMParator:BEEP?**
Query Response	**{OFF,PASS,FAIL}**
Example	**SEND> COMP:BEEP?** **RET> OFF**

10.12.9 COMParator:OPEN

The :COMParator:OPEN command selects the open condition for main parameter.

Command Syntax	**COMParator:OPEN {OFF,2,5,10,20,50}**
Parameter	**Where,** OFF Turns the beeper off. 2,5,10,20,50 The percent range value
Example	**SEND> COMP:OPEN 2**
Query Syntax	**COMParator:OPEN?**
Query Response	**{OFF,2,5,10,20,50}**
Example	**SEND> COMP:OPEN?** **RET> OFF**

10.13 LIST Subsystem

The LIST or SWEEP Subsystem command group sets the List Sweep measurement function, including the sweep point setting and limit values for the limit function.

Figure 10-8 LIST Subsystem Command Tree

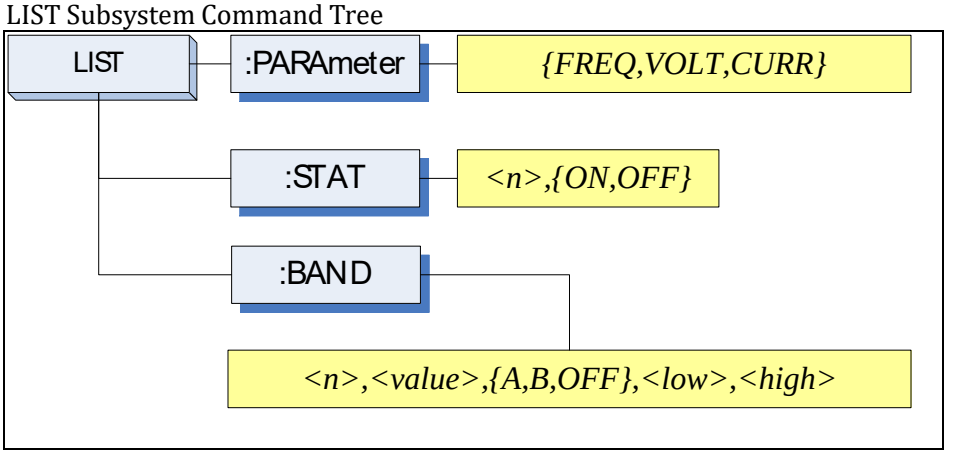

10.13.1 LIST:PARAmeter

The LIST:PARAmeter command sets the list sweep parameter.

Command Syntax	`LIST:PARAmeter {FREQ,VOLT,CURR}`
Parameter	`Where, {FREQ,LEVEL} is:` FREQ Sets the sweep parameter to frequency VOLT Sets the sweep parameter to voltage level CURR Sets the sweep parameter to current level
Example	`SEND> LIST:PARA VOLT`
Query Syntax	`LIST:PARAmeter?`
Query Response	`{FREQ,VOLT,CURR}`
Example	`SEND> LIST:PARA?` `RET> FREQ`

10.13.2 LIST:STAT

The LIST:STAT command turns on/off the specified sweep point.

Command Syntax	`LIST:STAT <n>,{ON,OFF,1,0}`
Parameter	`Where,<n> is:` n NR1(1 to 10): List sweep point ON or 1 Set this point to ON OFF or 0 Set this point to OFF
Example	`SEND> LIST:STAT 1,ON`
Query Syntax	`LIST:STAT? <n>`
Parameter	`Where,<n> is:` n NR1(1 to 10): List sweep point
Query Response	`{on,off}`
Example	`SEND> LIST:STAT? 1` `RET> on`

10.13.3 LIST:BAND

The LIST:BAND command sets the List Sweep point value, limit mode and low/high limit values.

Command Syntax	**LIST:BAND <n>,<point value>,{A,B,OFF},<low>,<high>**
Parameter	**Where, <n>,<point value>,{A,B,OFF},<low>,<high> is:** n NR1(1 to 10): List sweep point <point value> sweep point value (frequency value or signal level voltage value) A, Uses the primary parameter as the limit parameter. B, Uses the secondary parameter as the limit parameter. OFF Turn off the List Sweep' s comparator function <low> NR1,NR2 or NR3: low limit value <high> NR1,NR2 or NR3: high limit value Note: The suffix multipliers can be used with this command. But the suffix units CANNOT be added.
Example	**SEND> LIST:BAND 1,1k,A,1n,2n** **SEND> LIST:BAND 2,10k,A,1E-9,2E-9**
Query Syntax	**LIST:BAND? <n>**
Parameter	**Where,<n> is:** n NR1(1 to 10): List sweep point
Query Response	**{on,off},<point value>,{A,B,-},<NR3:low>,<NR4:high>**
Example	**SEND> LIST:BAND? 1** **RET> on,1.00000e+03,A,1.000000E-9,2.000000E-9**

10.14 CORRection Subsystem

The CORRection subsystem command group sets the correction function, including the OPEN, SHORT and LOAD correction settings.

NOTE: The CORRection subsystem CANNOT work in <LIST MEAS> page.

Figure 10-9 CORRection Subsystem Command Tree

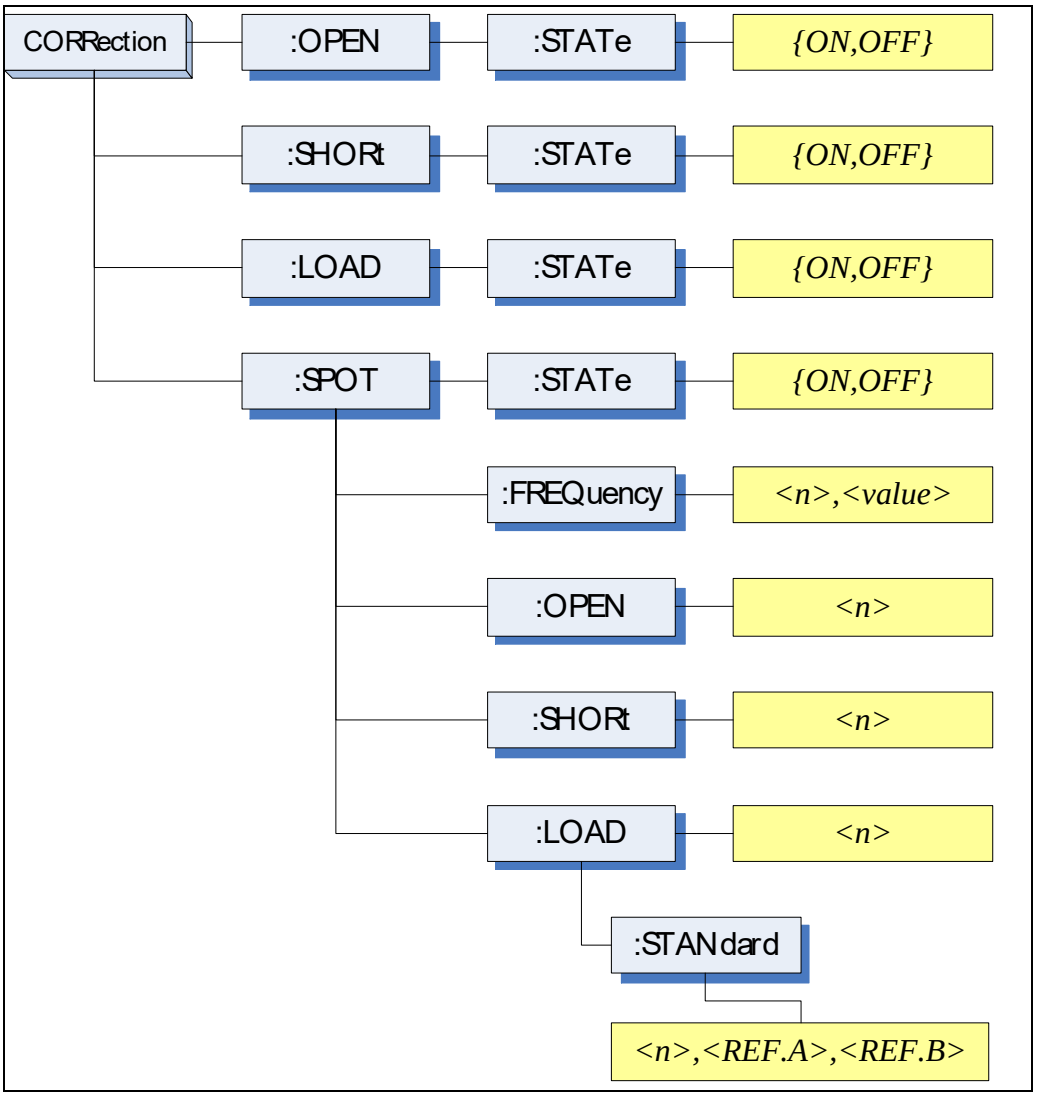

10.14.1 CORRection:OPEN

The CORRection:OPEN command execute all presetted OPEN correction data measurement points.

Command Syntax	`CORRection:OPEN`
Example	`SEND> CORRection:OPEN`

10.14.1.1 CORRection:OPEN:STATe

The CORRection:OPEN:STATe command sets the OPEN correction function to ON or OFF.

Command Syntax	`CORRection:OPEN:STATe {ON,OFF,1,0}`
Parameter	`Where, {ON,OFF,1,0} is:` ON, 1 When the function is ON OFF,0 When the function is OFF
Example	`SEND> CORR:OPEN:STATe ON` `RET> open`
Query Syntax	`CORRection:OPEN:STATe?`
Query Response	`{on,off}`
Example	`SEND> CORR:OPEN:STATe?` `RET> on`

10.14.2 CORRection:SHORt

The CORRection:SHORt command execute all presetted SHORT correction data measurement points.

Command Syntax	`CORRection:SHORt`
Example	`SEND> CORRection:SHOR` `RET> short`

10.14.2.1 CORRection:SHORt:STATe

The CORRection:SHORt:STATe command sets the SHORT correction function to ON or OFF.

Command Syntax	`CORRection:SHORt:STATe {ON,OFF,1,0}`
Parameter	`Where, {ON,OFF,1,0} is:` ON, 1 When the function is ON OFF,0 When the function is OFF
Example	`SEND> CORR:SHOR:STATe ON`
Query Syntax	`CORRection:SHOR:STATe?`
Query Response	`{on,off}`
Example	`SEND> CORR:SHOR:STATe?` `RET> on`

10.14.3 CORRection:SPOT:FREQuency

The CORRection:SPOT:FREQuency command sets the frequency point for the specified frequency point correction.

Command Syntax	`CORRection:SPOT:FREQuendy <value>`

Parameter	`Where, <value> is:`
	`value NR1,NR2 or NR3:Frequecny value.`
	A suffix multiplier can be used with this command. But the unit "Hz" cannot be added.

Example	`SEND> CORR:SPOT:FREQ 1k` `SEND> CORR:SPOT:FREQ 10k`
Query Syntax	`CORRection:SPOT:FREQuency?`
Query Response	`<NR3>`
Example	`SEND> CORR:SPOT:FREQ?` `RET> 1.000000e+03`

10.14.4 CORRection:SPOT:OPEN

This command executes the OPEN correction data measure for the specified frequency correction.

Command Syntax	`CORRection:SPOT:OPEN`
Example	`SEND> CORR:SPOT:OPEN`

10.14.5 CORRection:SPOT:SHORt

This command executes the SHORT correction data measure for the specified frequency correction.

Command Syntax	`CORRection:SPOT:SHORt`
Example	`SEND> CORR:SPOT:SHOR`

10.15 TRIGger Subsystem

The TRIGger subsystem command group is used to enable a measurement or a sweep measurement, and to set the trigger mode.

Figure 10-10 TRIGger Subsystem Command Tree

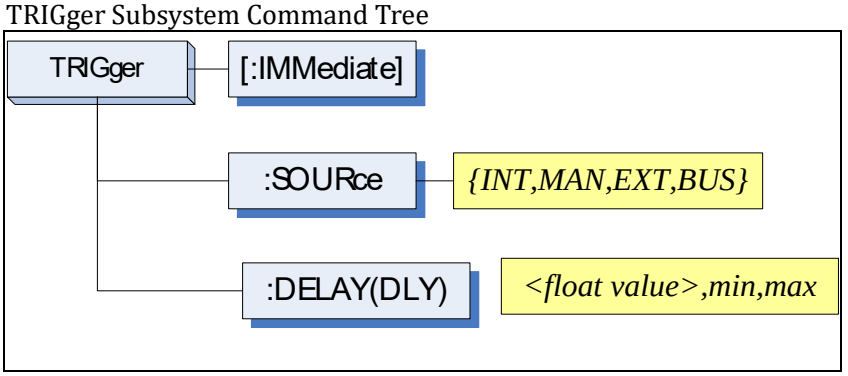

10.15.1 TRIGger[:IMMediate]

The TRIGger:IMMediate command causes the trigger to execute a measurement or a sweep measurement, regardless of the trigger state.

Command Syntax	`TRIGger[:IMMediate]`
Example	`SEND> TRIG`
Note	`This command can be ONLY used in BUS trigger mode.`

10.15.2 TRIGger:SOURce

The TRIGger:SOURce command sets the trigger mode.

Command Syntax	`TRIGger:SOURce {INT,MAN,EXT,BUS}`
Parameter	Where, {INT,MAN,EXT,BUS} is INT Internal Trigger Mode MAN Manual Trigger Mode EXT External Trigger Mode BUS BUS Trigger Mode
Example	`SEND> TRIG:SOUR BUS`
Query Syntax	`TRIGger:SOURce?`
Query Response	`{INT,MAN,EXT,BUS}`
Example	`SEND> TRIG:SOUR?` `RET> INT`

10.15.3 TRIGger:DELAY

The TRIGger:DELAY command sets the trigger delay time.

Command Syntax	`TRIGger:DELAY {<float>,min,max}` `TRIGger:DLY {<float>,min,max}`
Parameter	Where, is float value: from 1ms to 60.00s min: =0ms max: =60.000s
Example	`SEND> TRIG:DLY 1` //1.000s
Query Syntax	`TRIGger:DELAY?`

	TRIGger:DLY?
Query Response	{0.000s~60.00s}
Example	SEND> TRIG:DLY? RET> 1.000s

10.16 BIAS Subsystem

The BIAS subsystem command group sets the DC BIAS switch to ON or OFF, and sets the DC bias voltage value.

Figure 10-11 BIAS Subsystem Command Tree

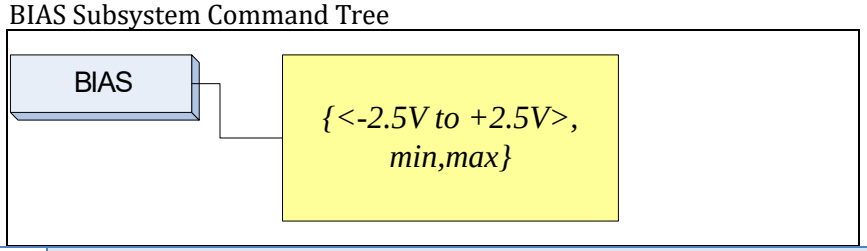

Command Syntax	BIAS {OFF,<-2.5 to +2.5V,min,max}
Example	SEND> BIAS OFF SEND> BIAS 2
Query Syntax	BIAS?
Query Response	<-2.50V~+2.50V>
Example	SEND> BIAS? RET> OFF

10.17 FILE Subsystem

The FILE subsystem command group executes the file operation.

Figure 10-12 FILE Subsystem Command Tree

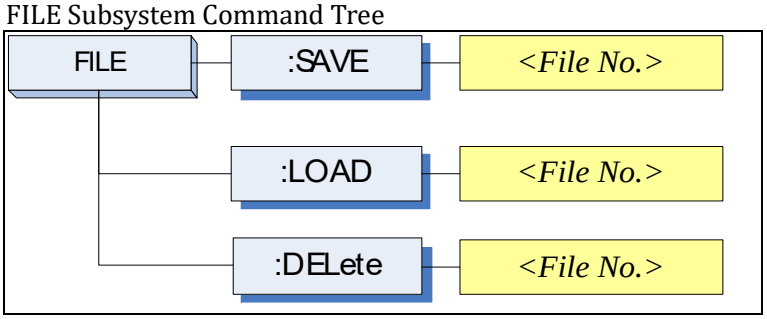

10.17.1 FILE?

The FILE? query returns the file number used by system.

Query Syntax	FILE?
Query Response	<NR1(0 TO 9):File number>
Example	SEND> FILE? RET> 0

10.17.2 FILE:SAVE

The FILE:SAVE command saves all user settings into current used file.

Command Syntax	FILE:SAVE
Example	SEND> FILE:SAVE

The FILE:SAVE <n> command saves all user settings into specified file.

Command Syntax	**FILE:SAVE <*File No.*>**
Parameter	**Where, <File No.> is:** NR1 (0 to 9)
Example	**SEND> FILE:SAVE 0**

10.17.3 FILE:LOAD

The FILE:LOAD command recalls all user settings from current used file.

Command Syntax	**FILE:LOAD**
Example	**SEND> FILE:LOAD**

The FILE:LOAD <n> command recalls all user settings from specified file.

Command Syntax	**FILE:LOAD <*File No.*>**
Parameter	**Where, <File No.> is:** NR1 (0 to 9)
Example	**SEND> FILE:LOAD 0**

10.17.4 FILE:DELete

Command Syntax	**FILE:DELete <*File No.*>**
Parameter	**Where, <File No.> is:** NR1 (0 to 9)
Example	**SEND> FILE:DELete**

10.18 ERRor Subsystem

10.18.1 ERRor?

The ERRor? retrieves last error information.

Query Syntax	**ERRor?**
Query Response	**Error string**
Example	**SEND> ERR?** **RET> no error.**

10.19 SYSTEM Subsystem

10.19.1 SYSTem:SHAKehand

The SYSTem:SHAKehand command feeds back the sent commands.

Command Syntax	**SYSTem:SHAKehand {on,off}**
Example	**SEND> SYST:SHAK ON**
Query Syntax	**SYSTem:SHAKehand?**
Query Response	**{on,off}**
Example	**SEND> SYST:SHAK?** **RET> OFF**

10.19.2 SYSTem:CODE

The SYSTem:CODE command feeds back error code for each sent command.

Command Syntax	`SYSTem:CODE {on,off}`
Example	`SEND> SYST:CODE ON`
Query Syntax	`SYSTem:CODE?`
Query Response	`{on,off}`
Example	`SEND> SYST:CODE?` `RET> OFF`

10.19.3 SYSTem:KEYLock

SYSTem:KEYLock command unlocks the keypad.

Command Syntax	`SYST:KEYLOCK OFF` `or UNLOCK(UNLK)`
Example	`SEND> UNLOCK`

10.19.4 SYSTem:RESult

SYSTem:RESult command selects the test results send mode.

Command Syntax	`SYSTem:RESult {fetch,auto}`
Example	`SEND> SYST:RES fetch`
Parameter	`Where,` `fetch` The test results will be sent back by command "fetch?" `auto` The results will be sent back by one trig.
Query Syntax	`SYSTem:RESult?`
Query Response	`{FETCH,AUTO}`
Example	`SEND> SYST:RES?` `RET> fetch`

10.20 Common Commands

10.20.1 *IDN?

The *IDN? query returns the instrument ID.

Query Syntax	`IDN? Or *IDN?`
Query Response	`<manufacturer>,<model>,<serial no.>,<fireware>`

10.20.2 *TRG

The *TRG command (trigger command) performs the same function as the Group Execute Trigger command.

Command Syntax	`*TRG`
Query Response	`<primary value>,<secondary value>,<comparator result>`
Example	`SEND> *TRG` `RET> +5.566785e-11,+7.253470e-01,OUT`
Note	This command can be used in BUS trigger mode. *TRG = TRIG;:FETC?

10.20.3 *SAV

*SAV = FILE:SAVE

The *SAV command saves all user settings into current used file.

Command Syntax	***SAV**
Example	**SEND> *SAV**

10.20.4 *RCL

*RCL = FILE:LOAD

The *RCL command recalls all user settings from current used file.

Command Syntax	***RCL**
Example	**SEND> *RCL**

11. Modbus（RTU）Protocol

This chapter include the following information:

- Data format – About the Modbus communication format.
- Function
- Variable Area
- Function Code

11.1 Data Format

We follow the Modbus (RTU) communication protocol, the instrument will respond to commands of the host computer and return the standard response frame.

Reference:

You can contact our sales department to get the communication test tool, which has Modbus communication debugging method. It contains CRC-16 calculator and floating point numbers into Modbus floating point format.

11.1.1 Command Frame

Figure 11-1 Modbus Command Frame



Table 11-1 Command Frame Description

	At least 3.5 character time squelch interval is requested
Station address	1 byte Modbus can support 00~0x63 stations Designated as 00 when unified broadcast In instruments that do not have an optional RS485, the default station address is 0x01
Function code	1 byte 0x03: Read multiple registers 0x04: =03H, not used 0x06: Write to a single register, can use 10H instead 0x08: Echo test (used only for debugging) 0x10: Write to multiple registers
Data	Specify register address, quantity, and content
CRC-16	2 bytes, low in front Cyclic Redundancy Check Calculate all data from the station address to the end of the data to

	get the CRC16 check code
	At least 3.5 character time squelch interval is requested

11.1.2 CRC-16 Calculation Method

1. Set the initial value of the CRC-16 register to 0xFFFF.
2. Perform XOR calculation fo CRC-16 register and information of the first byte, then it return the result to the CRC register.
3. Fill in the MSB with 0 and use the CRC register to shift to the right by one bit.
4. If the bit moved from the LSB is "0", repeat step (3) (process the next shift). If the bit moved from the LSB is "1", will perform XOR calculation for the CRC register and 0xA001, then the result is returned to the CRC register.
5. Repeat steps (3) and (4) until you move 8 bits.
6. If the information processing has not been completed, perform XOR calculation for CRC register and information of the next Byte, and return to the CRC register, repeating from step (3).
7. Append the result of the calculation (the value of the CRC register) from the low byte to the message.

The following is a CRC calculation function for a VB language.

```
Function CRC16(data() As Byte) As Byte()
    Dim CRC16Lo As Byte, CRC16Hi As Byte   'CRC register
    Dim CL As Byte, CH As Byte       ' Polynomial code &HA001
    Dim SaveHi As Byte, SaveLo As Byte
    Dim i As Integer
    Dim flag As Integer
    CRC16Lo = &HFF
    CRC16Hi = &HFF
    CL = &H1
    CH = &HA0
    For i = 0 To UBound(data)
        CRC16Lo = CRC16Lo Xor data(i) 'Each data is XORed with the CRC register
        For flag = 0 To 7
            SaveHi = CRC16Hi
            SaveLo = CRC16Lo
            CRC16Hi = CRC16Hi \ 2     ' High bit right shift one bit
            CRC16Lo = CRC16Lo \ 2     ' Low bit right shift one bit
            If ((SaveHi And &H1) = &H1) Then ' If the last bit of the high byte
is 1
                CRC16Lo = CRC16Lo Or &H80   'Then the low byte is shifted to the
right and then supplement 1 at front
            End If            ' Otherwise automatically fill 0
            If ((SaveLo And &H1) = &H1) Then ' If the LSB is 1, then XOR with
the polynomial code
                CRC16Hi = CRC16Hi Xor CH
                CRC16Lo = CRC16Lo Xor CL
            End If
        Next flag
    Next i
    Dim ReturnData(1) As Byte
    ReturnData(0) = CRC16Hi      'CRC high bit
    ReturnData(1) = CRC16Lo      'CRC low bit
    CRC16 = ReturnData
    End Function
```

Reference: My company's "Communication Test Tool", which has Modbus communication debugging method. It contains the CRC-16 calculator.

Calculate the CRC-16 data to be appended to the end of the command frame, for example: 1234H:

Figure 11-2 Modbus append CRC-16 value

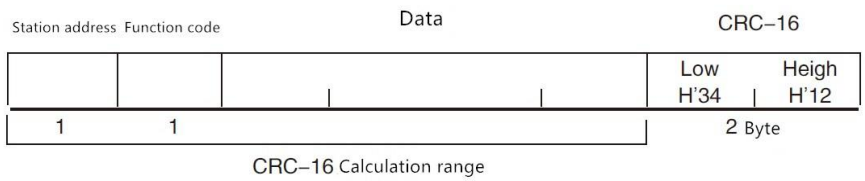

11.1.3 Response Frame

Unless it is a command broadcast by 00H station address, the other station address will return a response frame by the AT381x.

Fiture 11-3 Normal response frame

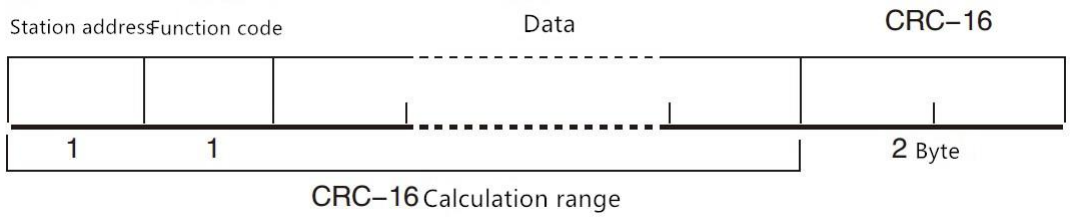

Figure 11-4 Abnormal response frame

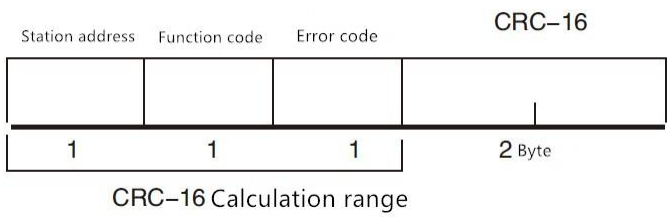

Table 11-2 Description for abnormal response frame

Station address	1 byte Returned from station address as it is
Function code	1 byte The function code of the command frame logical OR (OR) on BIT7 (0x80), for example: 0x03 OR 0x80 = 0x83
Error code	Exception code: 0x01 function code error (function code is not supported) 0x02 register error (register does not exist) 0x03 data error 0x04 execution error
CRC-16	2 bytes, low in front Cyclic Redundancy Check Calculate all data from the station address to the end of the data to get the CRC16 check code

11.1.4 No Response

In the following cases, the instrument will not perform any processing and will not respond, resulting in communication timeout.

1. Station address error
2. Transmission error
3. CRC-16 error
4. The number of digits is incorrect. For example, the function code 0x03 must have a total

digit of 8, and the received digits are less than 8 or greater than 8 bytes.

5. When the station address is 0x00, it represents the broadcast address, the AT381x does not respond.

11.1.5 Error Code

Table 11-3 Description for Error Code

Error code	Name	Description	priority
0x01	Function code error	Function code does not exist	1
0x02	Register error	Register code does not exist	2
0x03	Data error	The number of registers or the number of bytes is incorrect	3
0x04	Execution error	The data is illegal, and the written data is not allowed.	4

11.2 Function Code

The instrument only supports the following function codes, other function codes will respond to the error frame.

Table 11-4 Function code

Function code	Name	Description
0x03	Read multiple registers	Read multiple consecutive register data
0x04	Same as 0x03	Please use 0x03 instead
0x08	Echo test	The received data is returned as it was.
0x10	Write to multiple registers	Write to multiple consecutive registers

11.3 Register

The number of registers in the instrument is 2-byte mode, that is, 2 bytes must be written each time. For example, the speed register is 0x3002, the data is 2 bytes, and the value must be written to 0x0001.

Data:

The instrument supports the following values:

1. 1 register, double-byte (16-bit) integer, for example: 0x64 → 00 64
2. 2 registers, four-byte (32-bit) integer, for example: 0x12345678 → 12 34 56 78
3. 2 registers, 4 bytes (32 bits) single precision floating point number, 3.14 → 40 48 F5 C3

Reference: 

My company's "Communication Test Tool", which has Modbus communication debugging method. It contains floating-point converter..

11.4 Read Multiple Registers

Figure 11-5 Read Multiple Registers（0x03）

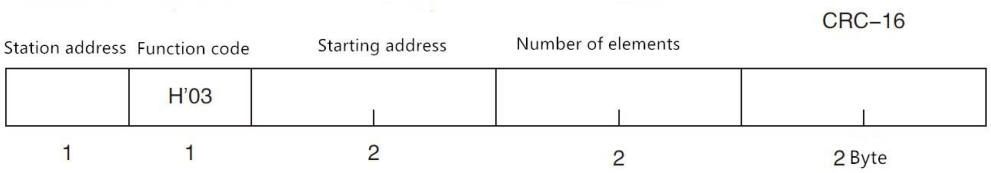

The function code for reading multiple registers is 0x03.

Table 11-5 Read Multiple Registers

Name	Name	Description
	Station address	When there is no RS485 address specified, the default is 01.
0x03	Function code	
	Starting address	Register start address, please refer to the Modbus command set
	Number of read registers 0001~006A（106）	The number of registers read continuously. Please refer to the Modbus command set to ensure that these register addresses arevalid, otherwise an error frame will be returned.
CRC-16	Check code	

Figure 11-6 Read Multiple Registers（0x03）Response Frame

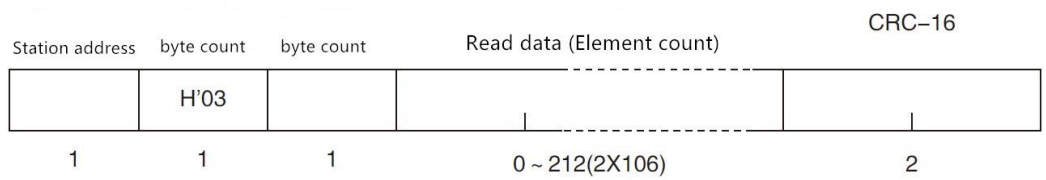

Name	Name	Description
	Station address	Returned as it was.
0x03 Or 0x83	Function code	No abnormality: 0x03 Error code: 0x83
	Number of bytes	= number of registers x 2 For example: 1 register returns 02
	Data	Data Read
CRC-16	Check code	

11.5 Writing to Multiple Registers

Figure 11-7 Writing to multiple registers（0x10）

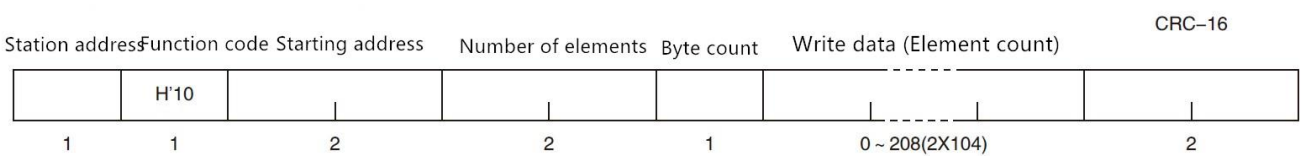

Table 11-6 Writing to multiple registers

Name	Name	Description
	Station address	When there is no RS485 address specified, the default is 01.
0x10	Function code	

	Starting address	Register start address, please refer to the Modbus command set
	Number of write registers 0001~0068（104）	The number of registers read continuously. Please refer to the Modbus command set to ensure that these register addresses arevalid, otherwise an error frame will be returned.
	Number of bytes	= number of registers x 2
CRC-16	Data	

Figure 11-8 Write to Multiple Registers（0x03）Response Frame

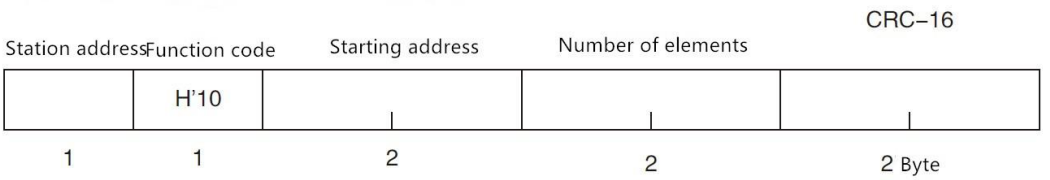

Name	Name	Description
	Station address	Returned as it was.
0x10 Or 0x90	Function code	No abnormality: 0x10 Error code: 0x90
	Starting address	
	Number of write registers 0001~0068（104）	
	CRC-16 Check code	

11.6 Echo Test

echo test function code 0x08, used for debug Modbus。

Figure 11-9 echo test（0x08）

Instruction frame

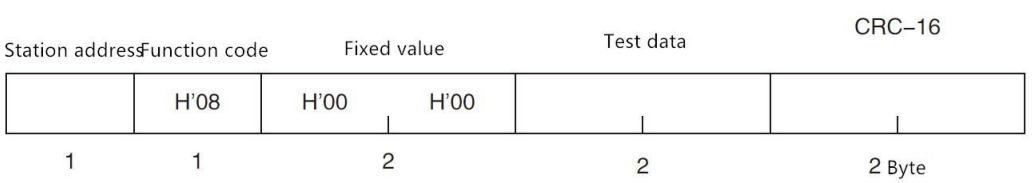

Response frame

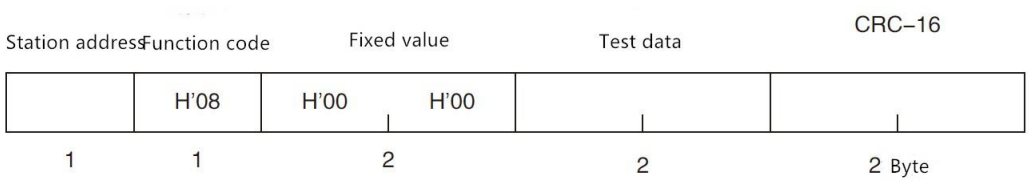

Name	Name	Description
	Station address	Returned as it was.
0x08	Function code	

	Fixed value	00 00
	Test data	Any value: for example 12 34
	CRC-16 Check code	

Example:

Assume that the test data is 0x1234:

Command:	01	08	00 00	12 34	ED 7C(CRC–16)
Response:	01	08	00 00	12 34	ED 7C(CRC–16)

12. Modbus (RTU) Command

This chapter contains the following information:

- Register overview
- Detailed operation

Reference: Be sure to contact our sales department to obtain the communication test tool, which has Modbus communication debugging method. It contains CRC-16 calculator and floating point numbers converted into Modbus floating point format.

Note: Unless special stated, the values of the command and response frames in the following instructions are all hexadecimal data.

12.1 Register Overview

The following is a list of all register addresses used by the AT381x. Any address not in the table will return error code 0x02.

Table 12-1 Register Overview

Register address	Name	Value	Description
2000-2001	Read the primary parameter measurement result	4-byte floating point number	Read-only register, data occupies 2 registers
2002-2003	Read the secondary parameter measurement result	4-byte floating point number	Read-only register, data occupies 2 registers
2004	Get the comparator result	2 Byte integer	Read-only register, data occupies 1 register
0000	Read instrument version number	4 Byte ASCII	Read-only register, data occupies 2 registers
3000	Function register	Data function 0000 Cs-Rs 0001 Cs-D 0002 Cp-Rp 0003 Cp-D 0004 Lp-Rp 0005 Lp-Q 0006 Ls-Rs	Read and write registers, 2-byte integer

		0007 Ls-Q 0008 Rs-Q 0009 Rp-Q 000A R-X 000B DCR 000C Z-r 000D Z-d 000E Z-D 000F Z-Q	
3001	LCR range No.	0000~0008	Read and write registers, 2-byte integer
3002	Range mode	0000：Manual 0001：Auto 0002：Nominal	Read and write registers, 2-byte integer
3003	Test speed	0000：Slow 0001：Medium1 0002：Medium2 0003：Fast	Read and write registers, 2-byte integer
3004	Average number of times	0000：Invalid 0001~0x0100 （1~256）	Read and write registers, 2-byte integer
3005	Trigger mode	0000：Internal 0001：Manual 0002：External 0003：Remote	Read and write registers, 2-byte integer
3006-3007	Test frequency	4-byte floating point number	Read and write registers, data occupies 2 registers
3008-3009	Test level	4-byte floating point number	Read and write registers, data occupies 2 registers
300A	DCR range No.	0000~0008	Read and write registers, 2-byte integer
300C	Recall at startup	0000：File 0 0001：Current file	Read and write registers, 2-byte integer
300D	Auto save	0000：Disable 0001：Allow	Read and write registers, 2-byte integer
300E	System language	0000：English 0001：Chinese	Read and write registers, 2-byte integer
3010-3011	Test current	4-byte floating point number	Read and write registers, data occupies 2 registers
3012-3013	DC bias	4-byte floating point number	Read and write registers, data occupies 2 registers
3100	Comparator status	0000：Comparator off	Read and write registers, 2-byte

		0001：Comparator on	integer
3101	Comparator mode	0000：ABS 0001：PER 0002：SEQ	Read and write registers, 2-byte integer
3102	Secondary parameter comparison on/off	0000: Secondary parameter comparison off 0001 : Secondary parameter comparison on	Read and write registers, 2-byte integer
3103	Bin count	0001~0009 Bin count 1~9bin	Read and write registers, 2-byte integer
3104	Beep	0000：off 0001：GD beep 0002：NG beep	Read and write registers, 2-byte integer
310A	Primary parameter nominal value	4-byte floating point number	Read and write registers, data occupies 2 registers
310C	Secondary parameter lower limit value	4-byte floating point number	Read and write registers, data occupies 2 registers
310E	Secondary parameter higher limit value	4-byte floating point number	Read and write registers, data occupies 2 registers
3110	Primary parameter BIN1 lower limit value	4-byte floating point number	Read and write registers, data occupies 2 registers
3112	Primary parameter BIN1 higher limit value	4-byte floating point number	Read and write registers, data occupies 2 registers
3114	Primary parameter BIN2 lower limit value	4-byte floating point number	Read and write registers, data occupies 2 registers
3116	Primary parameter BIN2 higher limit value	4-byte floating point number	Read and write registers, data occupies 2 registers
3118	Primary parameter BIN3 lower limit value	4-byte floating point number	Read and write registers, data occupies 2 registers
311A	Primary parameter BIN3 higher limit value	4-byte floating point number	Read and write registers, data occupies 2 registers
311C	Primary parameter BIN4 lower limit value	4-byte floating point number	Read and write registers, data occupies 2 registers
311E	Primary parameter BIN4 higher limit value	4-byte floating point number	Read and write registers, data occupies 2 registers
3120	Primary parameter BIN5 lower limit value	4-byte floating point number	Read and write registers, data occupies 2 registers
3122	Primary parameter BIN5 higher limit value	4-byte floating point number	Read and write registers, data occupies 2 registers
3124	Primary parameter BIN6 lower limit value	4-byte floating point number	Read and write registers, data occupies 2 registers
3126	Primary parameter BIN6 higher	4-byte floating point	Read and write registers, data

	limit value	number	occupies 2 registers
3128	Primary parameter BIN7 lower limit value	4-byte floating point number	Read and write registers, data occupies 2 registers
312A	Primary parameter BIN7 higher limit value	4-byte floating point number	Read and write registers, data occupies 2 registers
312C	Primary parameter BIN8 lower limit value	4-byte floating point number	Read and write registers, data occupies 2 registers
312E	Primary parameter BIN8 higher limit value	4-byte floating point number	Read and write registers, data occupies 2 registers
3130	Primary parameter BIN9 lower limit value	4-byte floating point number	Read and write registers, data occupies 2 registers
3132	Primary parameter BIN9 higher limit value	4-byte floating point number	Read and write registers, data occupies 2 registers
4000	Save settings to current file	Fixed value：0001	Write-only register, data 2 bytes
4008	Read current file data	Fixed value：0001	Write-only register, data 2 bytes
4010	Save settings to the specified file	0000~0009	Write-only register, data 2 bytes
4018	Read specified file data	0000~0009	Write-only register, data 2 bytes
5000	Open circuit full frequency clear register Read correction status	Write a fixed value：0001 Read： 0001 in correcting 0000 correction success FFFF correction fail	Read and write registers, data occupies 1 register Once the correction function is executed, Modbus will disable the execution of the write command and only allow the register to be read.
5008	Short circuit full frequency clear register Read correction status	Write a fixed value：0001 Read： 0001 in correcting 0000 correction success FFFF correction fail	Read and write registers, data occupies 1 register Once the correction function is executed, Modbus will disable the execution of the write command and only allow the register to be read.
5010	Point frequency 1 setting	Frequency value Floating point number 0： Point frequency off 4-byte floating point number	Read and write registers, data occupies 2 registers
5012	Point frequency 2 setting	Frequency value Floating point number 0： Point frequency off 4-byte floating point number	Read and write registers, data occupies 2 registers
5014	Point frequency 3 setting	Frequency value Floating point number 0：	Read and write registers, data occupies 2 registers

		oint frequency off 4-byte floating point number	
5020	Point frequency open circuit correction	0001：Point frequency 1 0002：Point frequency 2 0003：Point frequency 3 Read： 0000 correction success FFFF correction fail	Read and write registers, data occupies 1 register
5028	Point frequency short circuit correction	0001：Point frequency 1 0002：Point frequency 2 0003：Point frequency 3 Read： 0000 correction success FFFF correction fail	Read and write registers, data occupies 1 register

12.2 Obtain Measurement Data

12.2.1 Obtain measurement data

Register 2000~2003 is used for obtaining measurement data of the AT381x

Command：

1	2	3	4	5	6	7	8
01	03	2000		0002		CRC-16	
passive station	read	register		number of registers		check code	

Response

1	2	3	4	5	6	7	8	9
01	03	byte	single precision floating point number				CRC-16	

- **Obtain the primary parameter measurement result：**

Send:

1	2	3	4	5	6	7	8
01	03	20	00	00	02	CF	CB
passive station	read	register		number of registers		check code	

Response:

1	2	3	4	5	6	7	8	9
01	03	04	4E	6E	6B	28	A3	E8
01	03	byte	single precision floating point number				CRC-16	

Among them, B4~B6 is measurement data：4E6E6B28 stands for 1E9（Low position in front）

- **Obtain the secondary parameter measurement result:**

Send:

1	2	3	4	5	6	7	8
01	03	20	02	00	02	6E	0B
passive station	read	register		number of registers		check code	

Response:

1	2	3	4	5	6	7	8	9
01	03	04	50	15	02	F9	3B	D5
01	03	byte	single precision floating point number				CRC-16	

Among them, B4~B6 is measurement data：501502F9 stands for 1E10（Low position in front)

12.2.2 Obtain Comparator Results 【2004】

Register 2004 records voltage and resistance comparator results

16-bit storage domain:

Among them:

BIT8	secondary parameter bin	1：NG
BIT7	total GD bin	1：primary and secondary parameter GD， 0：Total NG
BIT3~BIT0	GD bin	1~9：GD　0：NG

Send:

1	2	3	4	5	6	7	8
01	**03**	**20**	**04**	**00**	**01**	**CE**	**0B**
passive station	read	register		number of registers		check code	

Response:

1	2	3	4	5	6	7
01	**03**	**02**	**00**	**01**	**E0**	**E5**

Example:

Data 01 81

BIT8:　1=secondary parameter NG

BIT7:　1= Total NG

BIT3-BIT0:　1=primary parameter GD bin BIN1

Data 00 01

BIT8:　0=secondary parameter GD

BIT7:　0=Total GD

BIT3-BIT0:　1= primary parameter GD bin BIN1

Obtain primary and secondary measurement values and comparator results【2000~2004】

Send:

1	2	3	4	5	6	7	8

01	03	20	00	00	05	8E	09
passive station	read	register		number of registers		check code	

Response:

01 03 0A **44 79 D4 B1** **37 D6 9D C2** **00 81** C6 24

12.3 Parameter Setting

12.3.1 Function Register【3000】

- Write

1	2	3	4	5	6	7	8	9	10	11
01	**10**	**30**	**00**	**00**	**01**	**02**	**00**	**00**	**96**	**53**
	write	register		number of registers		byte	data		CRC	

Response:

1	2	3	4	5	6	7	8
01	**10**	**30**	**00**	**00**	**01**	**AF**	**09**
		register		number of registers		CRC	

- Read

1	2	3	4	5	6	7	8
01	**03**	**30**	**00**	**00**	**01**	**8B**	**0A**
	read	register		number of registers		CRC	

Response:

1	2	3	4	5	6	7
01	**03**	**02**	**00**	**08**	**B9**	**82**
		byte	data		CRC	

Data values:

Data	Function
0000	Cs-Rs
0001	Cs-D
0002	Cp-Rp
0003	Cp-D
0004	Lp-Rp
0005	Lp-Q
0006	Ls-Rs
0007	Ls-Q
0008	Rs-Q
0009	Rp-Q
000A	R-X
000B	DCR
000C	Z-r

000D	Z-d
000E	Z-D
000F	Z-Q

12.3.2 LCR Range Register【3001】

- Write

1	2	3	4	5	6	7	8	9	10	11
01	**10**	**30**	**01**	**00**	**01**	**02**	**00**	**01**	**56**	**42**
	write	register		number of registers		byte	data		CRC	

Response:

1	2	3	4	5	6	7	8
01	**10**	**30**	**01**	**00**	**01**	**5F**	**09**
		register		number of registers		CRC	

- Read

1	2	3	4	5	6	7	8
01	**03**	**30**	**01**	**00**	**01**	**DA**	**CA**
	read	register		number of registers		CRC	

Response:

1	2	3	4	5	6	7
01	**03**	**02**	**00**	**01**	**79**	**84**
		byte	data		CRC	

Data values:

Data	Function	Description
0000	Range 0	100kΩ
0001	Range 1	30kΩ
0002	Range 2	10kΩ
0003	Range 3	3kΩ
0004	Range 4	1kΩ
0005	Range 5	300Ω
0006	Range 6	100Ω
0007	Range 7	30Ω
0008	Range 8	10Ω

12.3.3 Range Mode Register【3002】

- Write

1	2	3	4	5	6	7	8	9	10	11
01	**10**	**30**	**02**	**00**	**01**	**02**	**00**	**01**	**56**	**71**
	write	register		number of registers		byte	data		CRC	

Response:

1	2	3	4	5	6	7	8

01	10	30	02	00	01	AF	09
		register		number of registers		CRC	

- Read

1	2	3	4	5	6	7	8
01	**03**	**30**	**02**	**00**	**01**	**2A**	**CA**
	read	register		number of registers		CRC	

Response:

1	2	3	4	5	6	7
01	**03**	**02**	**00**	**01**	**79**	**84**
		byte	data		CRC	

Data values:

Data	Function	Description
0000	Manual range	
0001	Auto range	
0002	Nominal	Select range based on nominal value

12.3.4 Test Speed Register【3003】

- Write

1	2	3	4	5	6	7	8	9	10	11
01	**10**	**30**	**03**	**00**	**01**	**02**	**00**	**01**	**57**	**A0**
	write	register		number of registers		byte	data		CRC	

Response:

1	2	3	4	5	6	7	8
01	**10**	**30**	**03**	**00**	**01**	**FE**	**C9**
		register		number of registers		CRC	

- Read

1	2	3	4	5	6	7	8
01	**03**	**30**	**03**	**00**	**01**	**7B**	**0A**
	read	register		number of registers		CRC	

Response:

1	2	3	4	5	6	7
01	**03**	**02**	**00**	**01**	**79**	**84**
		byte	data		CRC	

Data values:

Data	Function	Description
0000	Slow speed	
0001	Invalid	This value is reserved
0002	Medium speed	

0003	Fast speed	

12.3.5 Average Times Register【3004】

- Write

1	2	3	4	5	6	7	8	9	10	11
01	**10**	**30**	**04**	**00**	**01**	**02**	**00**	**02**	**16**	**16**
	write	register		number of registers		byte	data		CRC	

Response:

1	2	3	4	5	6	7	8
01	**10**	**30**	**04**	**00**	**01**	**4F**	**08**
		register		number of registers		CRC	

- Read

1	2	3	4	5	6	7	8
01	**03**	**30**	**04**	**00**	**01**	**CA**	**CB**
	read	register		number of registers		CRC	

Response:

1	2	3	4	5	6	7
01	**03**	**02**	**00**	**02**	**39**	**85**
		byte	data		CRC	

Data values:

Data	Function	Description
0001~0100	average value 0~256	average value 0=average value 1

12.3.6 Trigger Mode Register【3005】

- Write

1	2	3	4	5	6	7	8	9	10	11
01	**10**	**30**	**05**	**00**	**01**	**02**	**00**	**02**	**17**	**C7**
	write	register		number of registers		byte	data		CRC	

Response:

1	2	3	4	5	6	7	8
01	**10**	**30**	**05**	**00**	**01**	**1E**	**C8**
		register		number of registers		CRC	

- Read

1	2	3	4	5	6	7	8
01	**03**	**30**	**05**	**00**	**01**	**9B**	**0B**
	read	register		number of registers		CRC	

Response:

1	2	3	4	5	6	7
01	**03**	**02**	**00**	**02**	**39**	**85**
		byte	data		CRC	

Data values:

Data	Function	Description
0000	Internal trigger	
0001	Manual trigger	Use Trigger key
0002	External trigger	Handler trigger
0003	Remote trigger	SCPI trigger

12.3.7 Test Frequency Register【3006】【3007】

- Write [1kHz: 1000 = 44 7A 00 00]

1	2	3	4	5	6	7	8~11	12	13
01	**10**	**30**	**06**	**00**	**02**	**04**	**44 7A 00 00**	**12**	**AD**
	write	register		number of registers		byte	data	CRC	

Response:

1	2	3	4	5	6	7	8
01	**10**	**30**	**06**	**00**	**02**	**AE**	**C9**
		register		number of registers		CRC	

- Read

1	2	3	4	5	6	7	8
01	**03**	**30**	**06**	**00**	**02**	**CF**	**1A**
	read	register		number of registers		CRC	

Response:

1	2	3	4~7	8	9
01	**03**	**04**	**44 7A 00 00**	**CF**	**1A**
		byte	data	CRC	

12.3.8 Test Voltage Register【3008】【3009】

- Write [1V: 1.00 = 3F 80 00 00]

1	2	3	4	5	6	7	8~11	12	13
01	**10**	**30**	**07**	**00**	**02**	**04**	**3F 80 00 00**	**EB**	**B4**
	write	register		number of registers		byte	data	CRC	

Response:

1	2	3	4	5	6	7	8
01	**10**	**30**	**07**	**00**	**02**	**FF**	**09**
		register		number of registers		CRC	

Note: The following situations will return an error

Test Condition	Description
<Correction> page	Error in operation
<List Sweep> page	Error in operation
Function：DCR	Error in operation
Level value exceeds specification value	Data error

- Read

1	2	3	4	5	6	7	8
01	**03**	**30**	**07**	**00**	**02**	**7A**	**CA**
	read	register		number of registers		CRC	

Response:

1	2	3	4~7	8	9
01	**03**	**04**	**3F 80 00 00**	**F7**	**CF**
		byte	data	CRC	

Note: The following situations will return an error

Test Condition	Description
<Correction> page	Error in operation
<List Sweep> page	Error in operation
Level is current state	Error in operation
Function：DCR	Error in operation

12.3.9 DCR Range Register【300A】

- Write

1	2	3	4	5	6	7	8	9	10	11
01	**10**	**30**	**0A**	**00**	**01**	**02**	**00**	**01**	**97**	**3A**
	write	register		number of registers		byte	data		CRC	

Response:

1	2	3	4	5	6	7	8
01	**10**	**30**	**0A**	**00**	**01**	**2E**	**CB**
		register		number of registers		CRC	

- Read

1	2	3	4	5	6	7	8
01	**03**	**30**	**0A**	**00**	**01**	**AB**	**08**
	read	register		number of registers		CRC	

Response:

1	2	3	4	5	6	7
01	**03**	**02**	**00**	**04**	**B9**	**87**
		byte	data		CRC	

Data values：

Data	Function	Description

0000	Range 0	100kΩ
0001	Range 1	30kΩ
0002	Range 2	10kΩ
0003	Range 3	3kΩ
0004	Range 4	1kΩ
0005	Range 5	300Ω
0006	Range 6	100Ω
0007	Range 7	30Ω
0008	Range 8	3Ω

12.3.10 Startup File Recall Register【300C】

- Write

1	2	3	4	5	6	7	8	9	10	11
01	**10**	**30**	**0C**	**00**	**01**	**02**	**00**	**01**	**FA**	**C8**
	write	register		number of registers		byte	data		CRC	

Response:

1	2	3	4	5	6	7	8
01	**10**	**30**	**0C**	**00**	**01**	**CE**	**CA**
		register		number of registers		CRC	

- Read

1	2	3	4	5	6	7	8
01	**03**	**30**	**0C**	**00**	**01**	**4B**	**09**
	read	register		number of registers		CRC	

Response:

1	2	3	4	5	6	7
01	**03**	**02**	**00**	**01**	**79**	**84**
		byte	data		CRC	

Data values:

Data	Function	Description
0000	File 0	Default setting
0001	Current file	

12.3.11 Auto Save【300D】

- Write

1	2	3	4	5	6	7	8	9	10	11
01	**10**	**30**	**0D**	**00**	**01**	**02**	**00**	**01**	**56**	**8E**
	write	register		number of registers		byte	data		CRC	

Response:

1	2	3	4	5	6	7	8

01	10	30	0D	00	01	9F	0A
		register		number of registers		CRC	

- Read

1	2	3	4	5	6	7	8
01	**03**	**30**	**0D**	**00**	**01**	**79**	**84**
	read	register		number of registers		CRC	

Response:

1	2	3	4	5	6	7
01	**03**	**02**	**00**	**01**	**79**	**84**
		byte	data		CRC	

Data values:

Data	Function	Description
0000	OFF	Default setting
0001	ON	

12.3.12 System Language Setting【300E】

- Write

1	2	3	4	5	6	7	8	9	10	11
01	**10**	**30**	**0E**	**00**	**01**	**02**	**00**	**01**	**56**	**BD**
	write	register		number of registers		byte	data		CRC	

Response:

1	2	3	4	5	6	7	8
01	**10**	**30**	**0E**	**00**	**01**	**6F**	**0A**
		register		number of registers		CRC	

- Read

1	2	3	4	5	6	7	8
01	**03**	**30**	**0E**	**00**	**01**	**EA**	**C9**
	read	register		number of registers		CRC	

Response:

1	2	3	4	5	6	7
01	**03**	**02**	**00**	**01**	**79**	**84**
		byte	data		CRC	

Data values:

Data	Function	Description
0000	English	
0001	Chinese	

12.3.13 Test Current Register【3010】【3011】

- Write [1mA: 0.001 = 3A 83 12 6F]

1	2	3	4	5	6	7	8~11	12	13
01	**10**	**30**	**10**	**00**	**02**	**04**	**3A 83 12 6F**	**17**	**1E**
	write	register		number of registers		byte	Data (1mA)	CRC	

Response:

1	2	3	4	5	6	7	8
01	**10**	**30**	**10**	**00**	**02**	**4F**	**0D**
		register		number of registers		CRC	

Note: The following situations will return an error

Test Condition	Description
<Correction> page	Error in operation
<List Sweep> page	Error in operation
Function：DCR	Error in operation
Level value exceeds specification value	Data error

- Read

1	2	3	4	5	6	7	8
01	**03**	**30**	**10**	**00**	**02**	**CA**	**CE**
	read	register		number of registers		CRC	

Response:

1	2	3	4~7	8	9
01	**03**	**04**	**3A 83 12 6F**	**4B**	**8F**
		byte	data 1mA	CRC	

Note: The following situations will return an error

Test Condition	Description
<Correction> page	Error in operation
<List Sweep> page	Error in operation
Level is voltage state	Error in operation
Function：DCR	Error in operation

Note: The current level is not current mode, or an operation error is returned when the measurement parameter is DCR.

12.3.14 DC Bias Register【3012】【3013】

- Write 1V: 3F 80 00 00

1	2	3	4	5	6	7	8~11	12	13
01	**10**	**30**	**12**	**00**	**02**	**04**	**3F 80 00 00**	**2A**	**87**
	write	register		number of registers		byte	data (1V)	CRC	

Response:

1	2	3	4	5	6	7	8

01	10	30	12	00	02	EE	CD
		register		number of registers		CRC	

- Read

1	2	3	4	5	6	7	8
01	**03**	**30**	**12**	**00**	**02**	**6B**	**0E**
	read	register		number of registers		CRC	

Response:

1	2	3	4~7	8	9
01	**03**	**04**	**00 00 00 00**	**FA**	**33**
		byte	data	CRC	

12.4 Comparator Setting

The comparator parameter register address starts at 3100.

12.4.1 Comparator Status Register【3100】

- Write

1	2	3	4	5	6	7	8	9	10	11
01	**10**	**31**	**00**	**00**	**01**	**02**	**00**	**01**	**47**	**53**
	write	register		number of registers		byte	data		CRC	

Response:

1	2	3	4	5	6	7	8
01	**10**	**31**	**00**	**00**	**01**	**0F**	**35**
		register		number of registers		CRC	

- Read

1	2	3	4	5	6	7	8
01	**03**	**31**	**00**	**00**	**01**	**8A**	**F6**
	read	register		number of registers		CRC	

Response:

1	2	3	4	5	6	7
01	**03**	**02**	**00**	**01**	**79**	**84**
		byte	data		CRC	

Data values:

Data	Function	Description
0000	Comparator off	Default setting
0001	Comparator on	

12.4.2 Comparator Mode Register【3101】

- Write

1	2	3	4	5	6	7	8	9	10	11
01	**10**	**31**	**01**	**00**	**01**	**02**	**00**	**01**	**46**	**82**
	write	register		number of registers		byte	data		CRC	

Response:

1	2	3	4	5	6	7	8
01	**10**	**31**	**01**	**00**	**01**	**5E**	**F5**
		register		number of registers		CRC	

- Read

1	2	3	4	5	6	7	8
01	**03**	**31**	**01**	**00**	**01**	**DB**	**36**
	read	register		number of registers		CRC	

Response:

1	2	3	4	5	6	7
01	**03**	**02**	**00**	**01**	**79**	**84**
		byte	data		CRC	

Data values:

Data	Function	Description
0000	ABS compare	Absolute deviation comparison
0001	PER compare	Percent deviation comparison
0002	SEQ compare	Sequential comparison

12.4.3 Secondary Comparator ON/OFF Register【3102】

- Write

1	2	3	4	5	6	7	8	9	10	11
01	**10**	**31**	**02**	**00**	**01**	**02**	**00**	**01**	**46**	**B1**
	write	register		number of registers		byte	data		CRC	

Response:

1	2	3	4	5	6	7	8
01	**10**	**31**	**02**	**00**	**01**	**AE**	**F5**
		register		number of registers		CRC	

- Read

1	2	3	4	5	6	7	8
01	**03**	**31**	**02**	**00**	**01**	**2B**	**36**
	read	register		number of registers		CRC	

Response:

1	2	3	4	5	6	7
01	**03**	**02**	**00**	**01**	**79**	**84**
		byte	data		CRC	

Data values:

Data	Function	Description
0000	Secondary parameter comparison off	
0001	Secondary parameter comparison on	

12.4.4 Comparison Bin No. Register【3103】

- Write

1	2	3	4	5	6	7	8	9	10	11
01	**10**	**31**	**03**	**00**	**01**	**02**	**00**	**01**	**47**	**B1**
	write	register		number of registers		byte	data		CRC	

Response:

1	2	3	4	5	6	7	8
01	**10**	**31**	**03**	**00**	**01**	**FF**	**35**
		register		number of registers		CRC	

- Read

1	2	3	4	5	6	7	8
01	**03**	**31**	**03**	**00**	**01**	**7A**	**F6**
	read	register		number of registers		CRC	

Response:

1	2	3	4	5	6	7
01	**03**	**02**	**00**	**01**	**79**	**84**
		byte	data		CRC	

Data values:

Data	Function	Description
0000	Invalid	
0001~0009	Bin count	

12.4.5 Alarm Register【3104】

- Write

1	2	3	4	5	6	7	8	9	10	11
01	**10**	**31**	**04**	**00**	**01**	**02**	**00**	**01**	**46**	**D7**
	write	register		number of registers		byte	data		CRC	

Response:

1	2	3	4	5	6	7	8
01	**10**	**31**	**04**	**00**	**01**	**4E**	**F4**
		register		number of		CRC	

			registers	

- Read

1	2	3	4	5	6	7	8
01	**03**	**31**	**04**	**00**	**01**	**CB**	**37**
	read	register		number of registers		CRC	

Response:

1	2	3	4	5	6	7
01	**03**	**02**	**00**	**01**	**79**	**84**
		byte	data		CRC	

Data values:

Data	Function	Description
0000	OFF	Turned off
0001	PASS	GD beep
0002	FAIL	NG beep

12.4.6 Nominal Value Register【310A】【310B】

The primary parameter nominal value uses 2 registers, 310A and 310B. please note that reading 310B alone is invalid.

- Write

100E-9 (Single precision floating point number：33D6BF95)

1	2	3	4	5	6	7	8	9	10	11	12	13
01	10	31	0A	00	02	04	33	D6	BF	95	74	A2
	write	register		number of registers		byte	data				CRC	

Response:

1	2	3	4	5	6	7	8
01	10	31	0A	00	02	6F	36
		register		number of registers		CRC	

- Read

1	2	3	4	5	6	7	8
01	03	31	0A	00	02	EA	F5
	read	register		number of registers		CRC	

Response:

1	2	3	4	5	6	7	8	9
01	03	04	33	D6	BF	95	A4	D0
		byte	data 100E-9				CRC	

12.4.7 Secondary Parameter Limit Value Register【310C-310F】

The secondary parameter limit value starts from 310C, the lower limit uses 2 registers, and the upper limit uses 2 registers, total of 4 registers.

The lower and upper limits can be set separately, or simultaneously.

- Write

Lower limit：0.001, Upper limit：0.01

1	2	3~4	5	6	7	8~11	12~15	16~17
01	10	310C	00	02	04	3A 83 12 6F	3C 23 D7 0A	21 AE
						Lower limit	Upper limit	

Response:

1	2	3	4	5	6	7	8
01	10	31	0C	00	04	0F	35

- read

1	2	3	4	5	6	7	8
01	03	31	0C	00	04	8A	F6

Response:

1	2	3~4	5~8	9~12	13~14
01	03	31 14	3A 83 12 6F	3C 23 D7 0A	51 61
			Lower limit	Upper limit	

12.4.8 Primary Parameter Limit Value Register【3110-3133】

There are total of 9 bins for primary parameter, the limit value starts from 3110, the lower limit of each bin uses 2 registers, and the upper limit uses 2 registers, total of 4 registers.
The lower and upper limits can be set separately, or simultaneously.

- Write

BIN1

Lower limit：-10,　Upper limit：10

1	2	3~4	5	6	7	8~11	12~15	16~17
01	10	3110	00	02	04	C1 20 00 00	41 20 00 00	CD5C
						Lower limit	Upper limit	

Response:

1	2	3	4	5	6	7	8
01	10	31	10	00	04	8F	1F

- Read

1	2	3	4	5	6	7	8
01	03	31	10	00	04	4B	30

Response:

1	2	3~4	5~8	9~12	13~14
01	03	31 10	C1 20 00 00	41 20 00 00	6C7F
			Lower limit	Upper limit	

12.5 File Operation

Since the AT381x settings are stored in the file, after the Modbus command is set, the data cannot be stored in the internal FlashRom in real time, which will cause the register data before the next power-on to be restored to the original file value.
Users can store all set values in the current or specified file with the file manipulation registers. Meanwhile, the specified file data can also be recalled into the setup register.

12.5.1 Save to Current File【4000】

Send a value of 0001 to 4000 registers, the AT381x will perform a file write operation, and all settings will be saved to the current file.

This register cannot be read.

- Write

1	2	3	4	5	6	7	8	9	10	11
01	**10**	**40**	**00**	**00**	**01**	**02**	**00**	**01**	**26**	**54**
	write	register		number of registers		byte	data		CRC	

Response:

1	2	3	4	5	6	7	8
01	**10**	**40**	**00**	**00**	**01**	**14**	**09**
		register		number of registers		CRC	

Data values:

Data	Function	Description
0001	Allow to operate	Fixed value

12.5.2 Save to Specified File【4008】

Send the file number to the 4008 register, the AT381x will perform the file write operation, all the settings will be saved to the specified file, and the specified file will be used as the current file of the system.

This register cannot be read.

- Write

1	2	3	4	5	6	7	8	9	10	11
01	**10**	**40**	**08**	**00**	**01**	**02**	**00**	**09**	**26**	**DA**
	write	register		number of registers		byte	data		CRC	

Response:

1	2	3	4	5	6	7	8
01	**10**	**40**	**00**	**00**	**01**	**95**	**CB**
		register		number of registers		CRC	

Data values:

Data	Function	Description
0000~0009	File 0~9	

12.5.3 Reloading the Current File【4010】

The fixed value 0001 to 4010 registers are sent and the AT381x loads the current file data into the system.

This register cannot be read.

- Write

1	2	3	4	5	6	7	8	9	10	11
01	**10**	**40**	**10**	**00**	**01**	**02**	**00**	**01**	**24**	**C4**

	write	register	number of registers	byte	data	CRC

Response：

1	2	3	4	5	6	7	8
01	**10**	**40**	**10**	**00**	**01**	**15**	**CC**
		register		number of registers		CRC	

Data values：

Data	Function	Description
0001	Fixed value	

12.5.4 Load the Specified File【4018】

Send the file number to the 4018 register, the AT381x will load the settings of the specified file into the system, and the specified file will be used as the current file of the system.
This register cannot be read.

- Write

1	2	3	4	5	6	7	8	9	10	11
01	**10**	**40**	**18**	**00**	**01**	**02**	**00**	**00**	**E4**	**4C**
	write	register		number of registers		byte	data		CRC	

Response：

1	2	3	4	5	6	7	8
01	**10**	**40**	**18**	**00**	**01**	**94**	**0E**
		register		number of registers		CRC	

Error response:

The file is empty and the AT381x will respond with an error code: 04

1	2	3	4	5
01	**90**	**04**	**4D**	**C3**
		Error code	**CRC**	

Data values：

Data	Function	Description
0000~0009	File 0~9	

12.6 Correction

12.6.1 Full-frequency Open Circuit Correction【5000】

Writing 0001 to Register 5000 will cause the AT381x to begin an open-circuit full-frequency correction.

Since the correction process takes a few seconds, during this time, any write operation will be ignored and only the read operation will be open. After the correction is completed, the write command is normally opened.

Correction status can be obtained by reading the 5000 register during correction execution or after correction:

0000	Correction success
FFFF	Correction fail
0001	In correction

- Write

Please write a fixed value to the 5000 register: 00 01
Send: 01 10 5000 0001 02 0001 3795
Response: 01 10 5000 0001 10C9

- Read

  During the execution of correction, can determine whether correction is completed by reading the register data.
  Send: 01 03 5000 0001 950A
  Response: 01 03 02 FFFF B9F4
  Returns FFFF, indicating that the correction failed



Note:
When performing correction, try not to read the correction status frequently. Continuous interrupts may cause the instrument to fail to perform correction.
Since the correction time is fixed, it is recommended that after the correction command is issued, after the host waits for the correction time to elapse, it will get the correction result.

12.6.2 Full-frequency Short-circuit Correction【5008】

Writing 0001 to Register 5008 will cause the AT381x to begin an open-circuit full-frequency correction.

Since the correction process takes a few seconds, during this time, any write operation will be ignored and only the read operation will be open. After the correction is completed, the write command is normally opened.

Correction status can be obtained by reading the 5008 register during correction execution or after correction:

0000	Correction success
FFFF	Correction fail
0001	In correction

- Write

Please write a fixed value to the 5008 register:: 00 01
Send：01 10 5008 0001 02 0001 36DD
Response：01 10 5008 0001 910B

- Read

  During the execution of correction, can determine whether correction is completed by reading the register data.

Send：01 03 5008 0001 950A

Response：01 03 02 FFFF B9F4

Returns FFFF, indicating that the correction failed



Note:

When performing correction, try not to read the correction status frequently. Continuous interrupts may cause the instrument to fail to perform correction.

Since the correction time is fixed, it is recommended that after the correction command is issued, after the host waits for the correction time to elapse, it will get the correction result.

12.6.3 Point frequency Correction Setting【5010~5015】

The AT381x point frequency can be set by the register [point frequency 1:5010~5011], [point frequency 2:5012~5013] and [point frequency 3:5014~5015], where set to 00000000 means the point frequency is off.

- Write

Point frequency 1：1kHz (Single precision floating point number：44 7A 00 00)

1	2	3	4	5	6	7	8	9	10	11	12	13
01	10	50	10	00	02	04	44	7A	00	00	3B	89
	write	register		number of registers		byte	data				CRC	

Response：

1	2	3	4	5	6	7	8
01	10	50	10	00	02	51	0D
		register		number of registers		CRC	

- Read

1	2	3	4	5	6	7	8
01	03	50	10	00	02	CF	1A
	read	register		number of registers		CRC	

Response：

1	2	3	4	5	6	7	8	9
01	03	04	44	7A	00	00	CF	1A
		byte	data 1000				CRC	

12.6.4 Point Frequency Open Circuit Correction【5020】

By writing the point frequency 0001~0003 to the register 5020, the AT381x will begin to perform an open-circuit point frequency correction.

After clearing is complete, you can get the clear status by reading the 5008 register:

0000 Correction success

FFFF Correction fail

- Write

Please write the point frequency to the 5020 register: 0001~0003, and execute the corresponding point frequency open circuit correction.

Send: 01 10 5020 0001 02 0001 30F5

Response: 01 10 5020 0001 1103

- Read

  During the execution of correction, can determine whether correction is completed by reading the register data.

Send：01 03 5020 0001 94C0

Response：01 03 02 0000 B844

Returns FFFF, indicating that the correction failed



Note:

It takes time to perform correction of the point frequency. Please delay the time in the software to return the data.

12.6.5 Point Frequency Short Circuit Correction【5028】

By writing the point frequency 0001~0003 to the register 5028, the AT381x will begin to perform an open-circuit point frequency correction.

After clearing is complete, you can get the clear status by reading the 5028 register:

0000 Correction success

FFFF Correction fail

- Write

Please write the point frequency to the 5028 register: 0001~0003, and execute the corresponding point frequency short-circuit correction.

Send: 01 10 5028 0001 02 0001 31BD

Response: 01 10 5028 0001 90C1

- Read

  During the execution of correction, can determine whether correction is completed by reading the register data.

Send：01 03 5028 0001 1502

Response：01 03 02 FFFF B9F4

Returns FFFF, indicating that the correction failed



Note:

It takes time to perform correction of the point frequency. Please delay the time in the software to return the data.

12.7 System Setup

12.7.1 Instrument version number【0000】

Read-only register, register [0000] ~ [0003] return the version number of the instrument:

- Read

1	2	3	4	5	6	7	8
01	03	00	10	00	02	4A	6D
	read	register		number of registers		CRC	

Response:

1	2	3	4	5	6	7	8	9
01	03	04	43	37	30	30	4A	6D
		byte	data ASCII: C700				CRC	

The version number is ASCII value: for example, 43 37 30 30 = C700

13. Performace Test

This chapter includes the following:

- Accuracy
- Accuracy Factor
- Performance Testing

Measurement accuracy includes errors such as measurement stability, temperature coefficient, linearity, measurement repeatability, etc.

The accuracy of the instrument measurement must be checked under the following conditions:

Warm-up time: ≥ 20 minutes.

After warming up, open circuit and short circuit correction are performed.

The instrument is in Auto range.

13.1 Accuracy

13.1.1 Accuracy for L, C, R, |Z|

Accuracy for L, C, R, |Z|Ae are expressed by the following formula:

$A_e = \pm[A + (K_a + K_b) \times 100] \times K_c$ [%]

A: Basic measurement accuracy

K_a: Impedance scale factor

K_b: Impedance scale factor)

K_c: Temperature factor

L, C Accuracy conditions: D_x (D measuring value) ≤0.1

R Accuracy conditions: Q_x (Q measuring value) ≤0.1

When Dx ≥ 0.1, for L, C accuracy factor A_e should be multiplied by $\sqrt{1+D_x^2}$

When Q_x≥0.1, for R accuracy factor A_e should be multiplied by $\sqrt{1+Q_x^2}$

13.1.2 D Accuracy

D 13.1.1 accuracy D_e are given by the following formula:

$$D_e = \pm\frac{A_e}{100}$$

The above formula is only used when D_x≤ 0.1.

When D_x>0.1, D_e should be multiplied by (1+Dx)

13.1.3 Q Accuracy

Q accuracy are given by the following formula:

$$Q_e = \pm\frac{Q_x \times D_e}{1 \mu Q_x \times D_e}$$

Here, Q_x is the measured Q value.

D_e is accuracy of D

Condition of the above formula is $Q_x \times D_e < 1$

13.1.4 θ Accuracy

θ accuracy are given by the following formula:

$$\theta_e = \frac{180}{\pi} \times \frac{A_e}{100} \quad [deg]$$

13.1.5 R_p Accuracy

When D_x (measured D value) ⩽ 0.1

R_p accuracy are given by the following formula:

$$R_p = \pm \frac{R_{px} \times D_e}{D_x \mu D_e} \quad [\Omega]$$

Here, R_{px} is the measured Rp value [S]。

D_x is the measured D value [F]。

D_e is accuracy of D.

13.1.6 R_s Accuracy

When D_x (measured D value) ⩽ 0.1

R_s accuracy are given by the following formula:

$$R_{se} = X_x \times D_e \quad [\Omega]$$

$$X_x = 2\pi f L_x = \frac{1}{2\pi f C_x}$$

Here,

X_x is the measured X value [S]。

C_x is the measured C value [F]。

L_x is the measured L value [H]。

D_e is accuracy of D

F is test frequency

13.2 Accuracy Factor

Figure 13-1 Basic measurement accuracy A

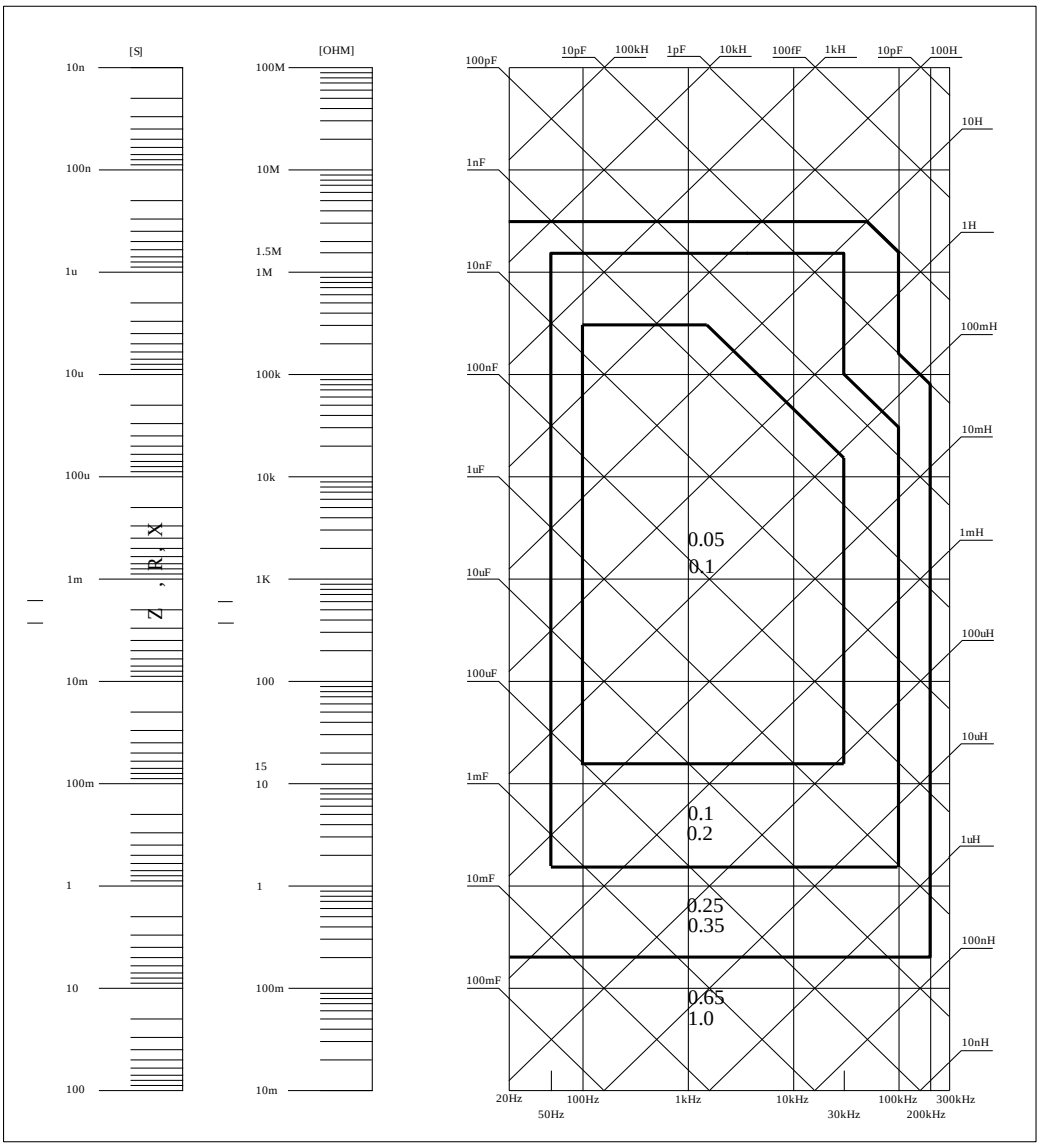

Figure 13 1 In the basic measurement accuracy, select a smaller value on the boundary line.

The basic accuracy A value selection method is as follows:

0.05 ---- When 0.4Vrms ≤ Vs ≤ 1.2Vrms, the measurement speed is medium speed, slow-speed A value.

0.1 ---- When 0.4Vrms ≤ Vs ≤ 1.2Vrms, the measurement speed is A value of medium speed and fast speed.

When Vs<0.4Vrms or Vs>1.2Vrms, A value is calculated as: selected A according to the current measurement speed, and then the accuracy correction coefficient Ar is selected according to the current test signal voltage (see Figure 6-2), A is multiplied by Ar getting the current basic measurement accuracy A. Here, Vs is the test signal voltage.

Figure 13-2 Basic accuracy correction curve

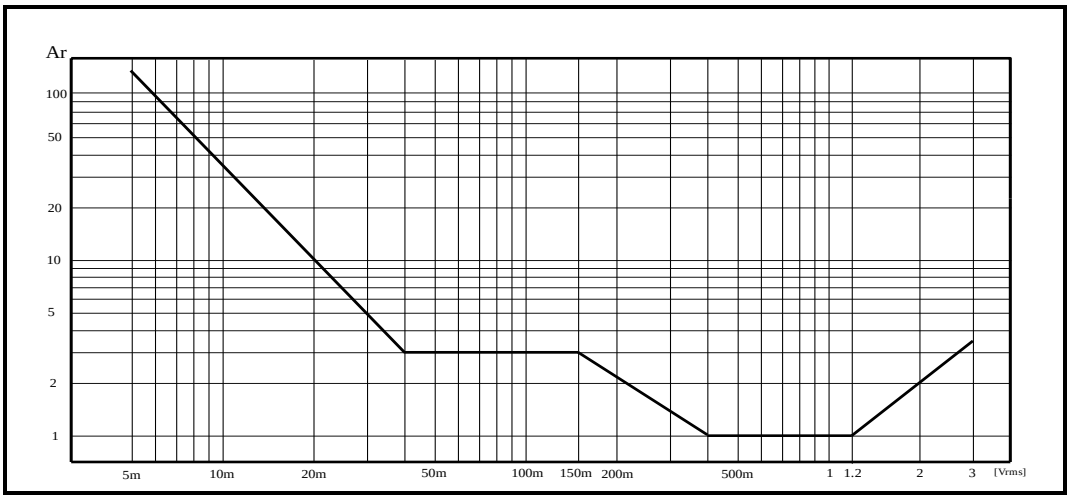

Table 13-1 Impedance scale factor Ka, Kb

Speed	Frequency	K_a	K_b
Medium 1 Medium 2 Slow	f_m<100Hz	$(\frac{1\times10^{-3}}{\lvert Z_m\rvert})(1+\frac{200}{V_s})(1+\sqrt{\frac{100}{f_m}})$	$\lvert Z_m\rvert(1\times10^{-9})(1+\frac{70}{V_s})(1+\sqrt{\frac{100}{f_m}})$
	100Hz≤fm≤100kHz	$(\frac{1\times10^{-3}}{\lvert Z_m\rvert})(1+\frac{200}{V_s})$	$\lvert Z_m\rvert(1\times10^{-9})(1+\frac{70}{V_s})$
	fm>100kHz	$(\frac{1\times10^{-3}}{\lvert Z_m\rvert})(2+\frac{200}{V_s})$	$\lvert Z_m\rvert(3\times10^{-9})(1+\frac{70}{V_s})$
Fast	f_m<100Hz	$(\frac{2.5\times10^{-3}}{\lvert Z_m\rvert})(1+\frac{400}{V_s})(1+\sqrt{\frac{100}{f_m}})$	$\lvert Z_m\rvert(2\times10^{-9})(1+\frac{100}{V_s})(1+\sqrt{\frac{100}{f_m}})$
	100Hz≤fm≤100kHz	$(\frac{2.5\times10^{-3}}{\lvert Z_m\rvert})(1+\frac{400}{V_s})$	$\lvert Z_m\rvert(2\times10^{-9})(1+\frac{100}{V_s})$
	fm>100kHz	$(\frac{2.5\times10^{-3}}{\lvert Z_m\rvert})(2+\frac{400}{V_s})$	$\lvert Z_m\rvert(6\times10^{-9})(1+\frac{100}{V_s})$

In this table,

fm: test frequency [Hz]

Zm: impedance of the device under test [ ]

Vs: test signal voltage [mVrms]

When the impedance is < 500Ω, K_a is used, K_b is invalid.

When the impedance is > 500Ω, K_b is used, and K_a is invalid.

Table 13-2 Temperature factor Kc

Temperature (℃)	5	8	18	28	38
Kc	6	4	2	1	2	4

Table 13-3 Calibration interpolation factor Kf

Test frequency	Kf
Typical frequency (direct correction)	0
Atypical frequency (interpolation correction)	0.0003

Table 13-4 Cable length factor

Test signal level	Cable length		
	0m	1m	2m
≤1.5Vrms	0	$2.5\times10^{-4}(1+0.05fm)$	$5\times10^{-4}(1+0.05fm)$
>1.5Vrms	0	$2.5\times10^{-3}(1+0.016fm)$	$5\times10^{-3}(1+0.05fm)$

In the table, fm is the test signal frequency [kHz].

13.3 Performace Test

Each test shall be carried out under the following working conditions.
Warm-up time: ≥ 20 minutes.
After warming up, open circuit and short circuit correction are performed.
The AT381x range works at "AUTO" to select the correct measurement range.

This test is only included in the test of main specifications. Other parameters not listed, users can test under the specified conditions according to the specifications listed in this manual. If the test result is found to beyond scope, please contact our maintenance department immediately for repair.

13.3.1 Devices and Equipment Used for Performance Test

Table 13-5 Devices and equipment used for performance testing

No.	Equipment Name		Technical Requirements
1	Standard capacitor	100pF	0.02% Loss D known
		1000pF	
		10000pF	
		10nF	
		0.1μF	
		1uF	
2	AC standard resistor	10Ω	0.02%
		100Ω	
		1kΩ	
		10kΩ	
		100kΩ	
3	Standard inductor	100μH	0.02%
		1mH	
		10mH	
		100mH	
4	Frequency meter		(0～1000) MHz
5	Digital multimeter		0.5%

13.3.2 Function check

Each soft key, display, terminal, etc. of the instrument should work normally, and all functions are correct.

13.3.3 Test signal level accuracy test

Place the digital multimeter on the AC voltage range with one test probe connected to the HD side of the meter and the other test probe connected to ground. Change the level to: 0.1V, 0.3V, 1V should meet the requirements in Appendix A.

13.3.4 Frequency accuracy test

Connect the ground terminal of the frequency meter to the ground of the AT381x. The test terminal of the frequency meter is connected to HD terminal of the instrument test terminal. Change the frequency to: 20Hz, 100Hz, 1kHz, 10kHz, 100kHz, the reading of the frequency meter should meet the requirements in the specification.

13.3.5 Capacitance C, loss D accuracy test

Parameter	Cp-D
Test frequency	100Hz 1kHz 10kHz 100kHz test separately
Level	1V
Range	AUTO
Speed	Slow

Short circuit and open circuit correction should be performed before testing. Connect standard capacitors 100pF, 1000pF, 10000pF, 10nF, 0.1uF, 1uF, change the frequency, the error capacitance C between the instrument reading and the standard value should be within the allowable error range specified in 6.1, and the loss D should be allowed in 6.1. Within the error range.

13.3.6 Inductance L accuracy test

Parameter	Ls-Q
Test frequency	100Hz 1kHz 10kHz 100kHz test separately
Level	1V
Range	AUTO
Speed	Slow

Short circuit and open circuit correction should be performed before testing. Connect the standard inductors 100μH, 1mH, 10mH, 100mH, change the frequency, the error between the instrument reading and the standard value should be within the allowable error range specified in 6.1.

13.3.7 Impedance Z accuracy test

Parameter	Z-θ
Test frequency	100Hz, 1kHz, 10kHz, 100kHz test separately
Level	1V
Range	AUTO
Speed	Slow

Short circuit and open circuit correction should be performed before testing. Connect the AC

standard resistors 10Ω, 100Ω, 1kΩ, 10kΩ, 100kΩ, change the frequency, and the error between the instrument reading and the standard value should be within the allowable error range specified in 6.1.

14. Examples

This section describes the basic test procedures and basic LCR theory, and gives examples of how to make measurements. This chapter mainly explains:

- Basic measurement procedures
- Examples of measurement methods

14.1 Basic Measurement Procedure

The following flow chart shows the basic procedures used to measure the impedance of capacitors, inductors, resistors, and other components. Follow the procedures to perform impedance measurements while referring to the items noted to the right side of each step.

Figure 14-1 Measurement flow chart

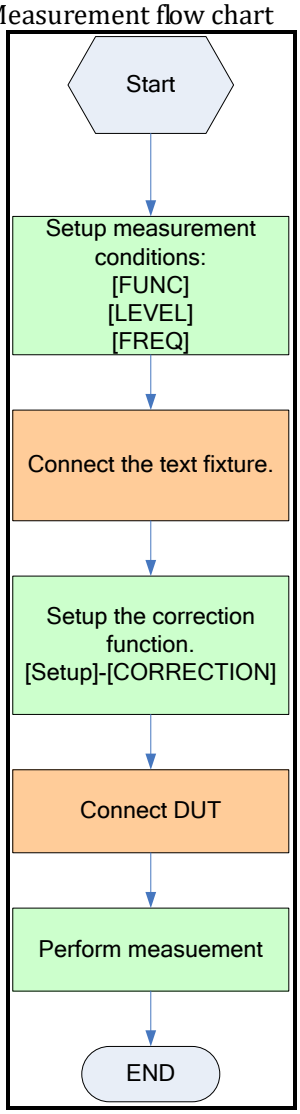

14.2 Example

In this section, we take a measurement of a thin film ceramic capacitor as an example to show how to measure the capacitance value.

In this example, a ceramic capacitor is measured under the following conditions.

- Sample (DUT) Ceramic capacitor
- Measurement Conditions:
- Function: Cp-D
- Test Frequency: 100 kHz
- Test Signal Level: 1V

Step 1 Turn the AT381x ON, AT381x enter enter Meas page

Step 2 Use the cursor key to select

[FUNC]: Press soft key to select Cp-D

[FREQ]: Input 100kHz

[LEVEL]: Input 1V

Step 3 Connect the test fixture ATL601 to the AT381x.

Step 4 Run correction function

Press [Setup] key

Press [Setup] key to enter [CORRECTION] page

Move to the OPEN field by using the cursor keys

Set [Open] to [On]

Don’ t connect any DUT to ATL601 as shown like this:



Press the [Open Full Correction] button until the progress box reaches 100% and disappears automatically. The word “Calibration finished” is displayed at the bottom of the screen.

Move to the SHORT field by using the cursor keys.

Set [Short] to [On]

Connect a shorting bar to the ATL601.

Press the [Short Full Correction] button until the progress box reaches 100% and disappears automatically. The word “Calibration finished” is displayed at the bottom of the screen.

Correction is finished, users does not need to perform point frequency correction.

Step 5 Press【Meas】key to return to <Meas Display> page

Step 6 Connect DUT to the test fixture as shown like this:



Step 7 View test results

Figure 14-2 Capacitor test results

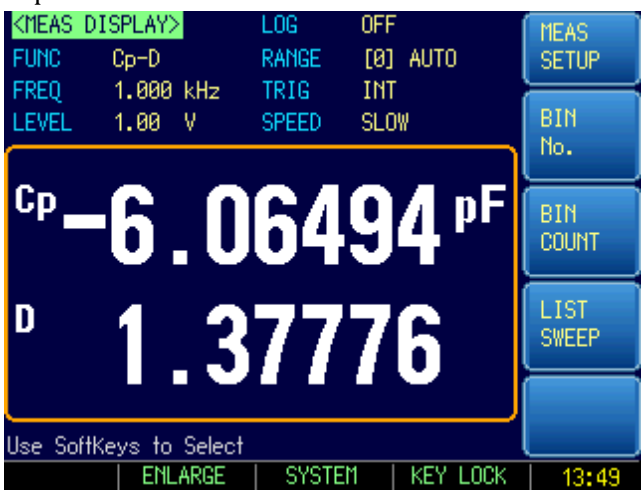

15. Specification

This chapter includes the following information:

- Specifications
- Dimension

15.1 Technical Indicators

Accuracy is defined as meeting all of the following conditions.
Temperature: 23℃±5℃
Humidity: ≤65% R.H.
Zeroing: Open and Short Correction
Warm up time: >60 minutes
A 1-year calibration cycle

Test signal level: 10%
Test frequency accuracy: 0.01%
Parameter Test Basic Accuracy: 0.05%

15.2 General Specification

Display: True color TFT-LCD, Size: 3.5″
Test Function: Cs-Rs, Cs-D, Cp-Rp, Cp-D, Lp-Rp, Lp-Q, Ls-Rs, Ls-Q, Rs-Q, Rp-Q, R-X, DCR, Z-θr, Z-θd, Z-D, Z-Q
Monitor Parameter: (2 sets) Z, D, Q, Vac, Iac, Δ, Δ%, θr, θd,R, X, G, B, Y
Basic Accuracy: AT3818/AT3816A/AT3817A/AT3810A 0.05% (within basic range)
Test Frequency:

AT3818: 10Hz ~ 300kHz continuous test frequency
AT3816A: 50Hz ~ 200kHz continuous test frequency
AT3816B: 50Hz ~ 200kHz 37 points
AT3817A: 50Hz ~ 100kHz continuous test frequency
AT3810A: 10Hz ~ 20kHz continuous test frequency
AT3817D: 50Hz ~ 100kHz, 10 points

Frequency range(F)	Resolution
10.0000Hz ≤ F ≤ 99.9999Hz	0.0001Hz
100.0000Hz ≤ F ≤ 999.999Hz	0.001Hz
1.00000kHz ≤ F ≤ 9.99999kHz	0.01Hz
10.0000kHz ≤ F ≤ 99.9999kHz	0.1Hz
100.000kHz ≤ F ≤ 300.000kHz	1Hz
10.0000kHz ≤ F ≤ 99.9999kHz	0.1Hz

100.000kHz ≤ F ≤ 200.000kHz	1Hz

Frequency Accuracy：0.01%

Typical frequency point:（AT3818，unit: Hz）

10	12	15	20	25	30	40	50	60	80
100	120	150	200	250	300	400	500	600	800
1k	1.2k	1.5k	2k	2.5k	3k	4k	5k	6k	8k
10k	12k	15k	20k	25k	30k	40k	50k	60k	80k
100k	120k	150k	200k	250k	300k				

Test Level: ACV: 10.00mV~2.00V, accuracy: 10%, CV mode accuracy: 6%
ACI: 100.0μA~20.00mA, accuracy: 10%, CC mode accuracy: 6% @2Vmax
DCR: ±1VDC (2Vpp) square wave, 3Hz maximum
0.033A (Max), output impedance 30Ω

Display digits: Primary parameter 6 digits; secondary parameter 6 digits, auxiliary parameter 6 digits

Display Range

Parameter	Display Range
L	0.00001nH ~ 9999.99H
C	0.00001pF ~ 9999.99mF
R、X、Z	0.00001Ω ~ 99.9999MΩ
B、G	0.01nS ~ 999.999S
D	0.00001 ~ 9.99999
Q	0.00001 ~ 99999.9
θd	-179.999°~179.999°
θr	-3.14159 ~ 3.14159
%	-999.999% ~ 999.999%
θd	-179.99°~179.99°
θr	-3.1416 ~ 3.1416
%	-99.999% ~ 999.99%

Measurement Speed: Fast：40 times/s，Medium：10 times/s，Slow：3 times/s
Output Impedance: 30Ω、50Ω and100Ω
Max. Reading: 999999
Ranging: Auto, Hold and Nominal range.
Equivalent Circuit: Series and Parallel
DC bias: -2.50V~+2.50V
Correction Function: OPEN/SHORT/LOAD
Files: 10 sets of built-in files and USB storage.
Beep Feature: OFF/GD/NG and HIGH/LOW tone.
Trigger Mode: Internal, Manual, External and Remote Trigger.
Built-in Interface: Handle）interface, RS232 interface
Programming language: SCPI and Modbus（RTU）

Environment: Indicator: Temperature 18℃ ~ 28℃ Humidity ≤ 65% RH

Operation: Temperature 10℃ ~ 40℃ Humidity 10~80% RH
Storage: Temperature -10℃~ 70℃ Humidity 10~90% RH

Power Supply:	90V-260VAC，50Hz~60Hz
Fuse:	250V 3A Slow-Blow
Maximum rated power:	15VA
Weight:	3.5kg, net

15.3 Dimensions

Dimensions

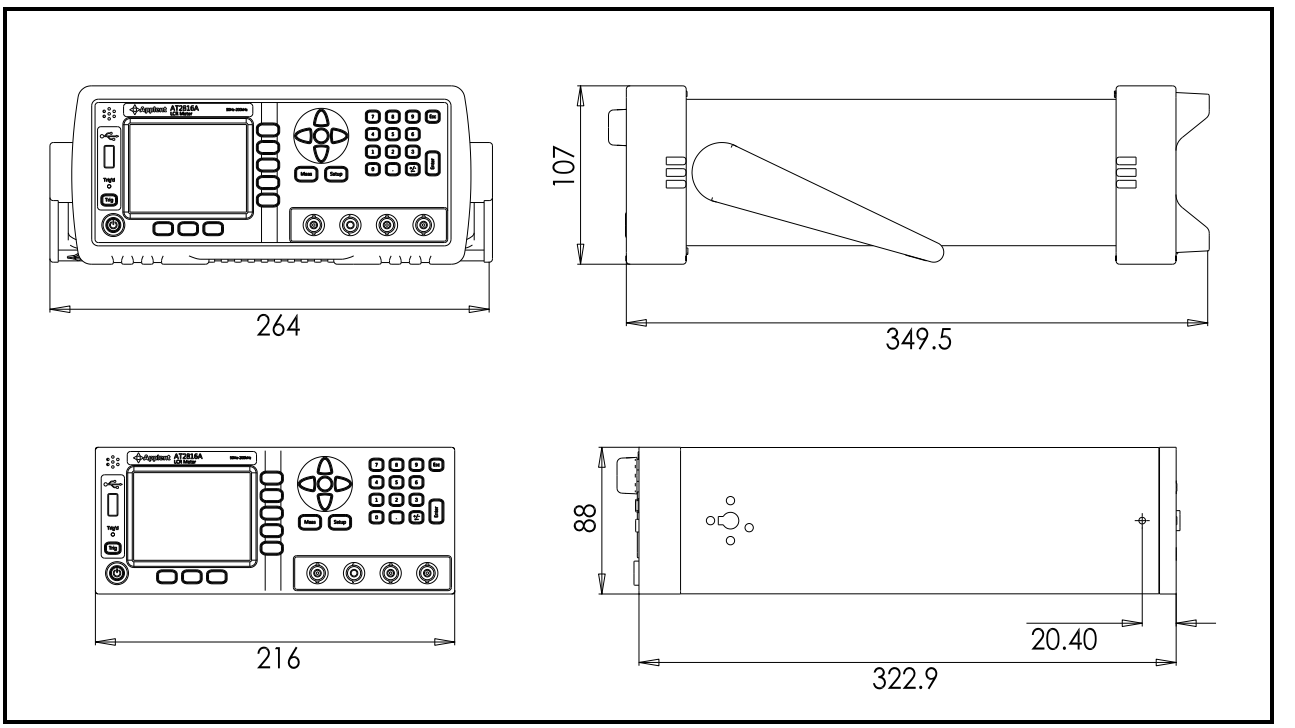

©2005-2010 Applent Instruments Ltd.